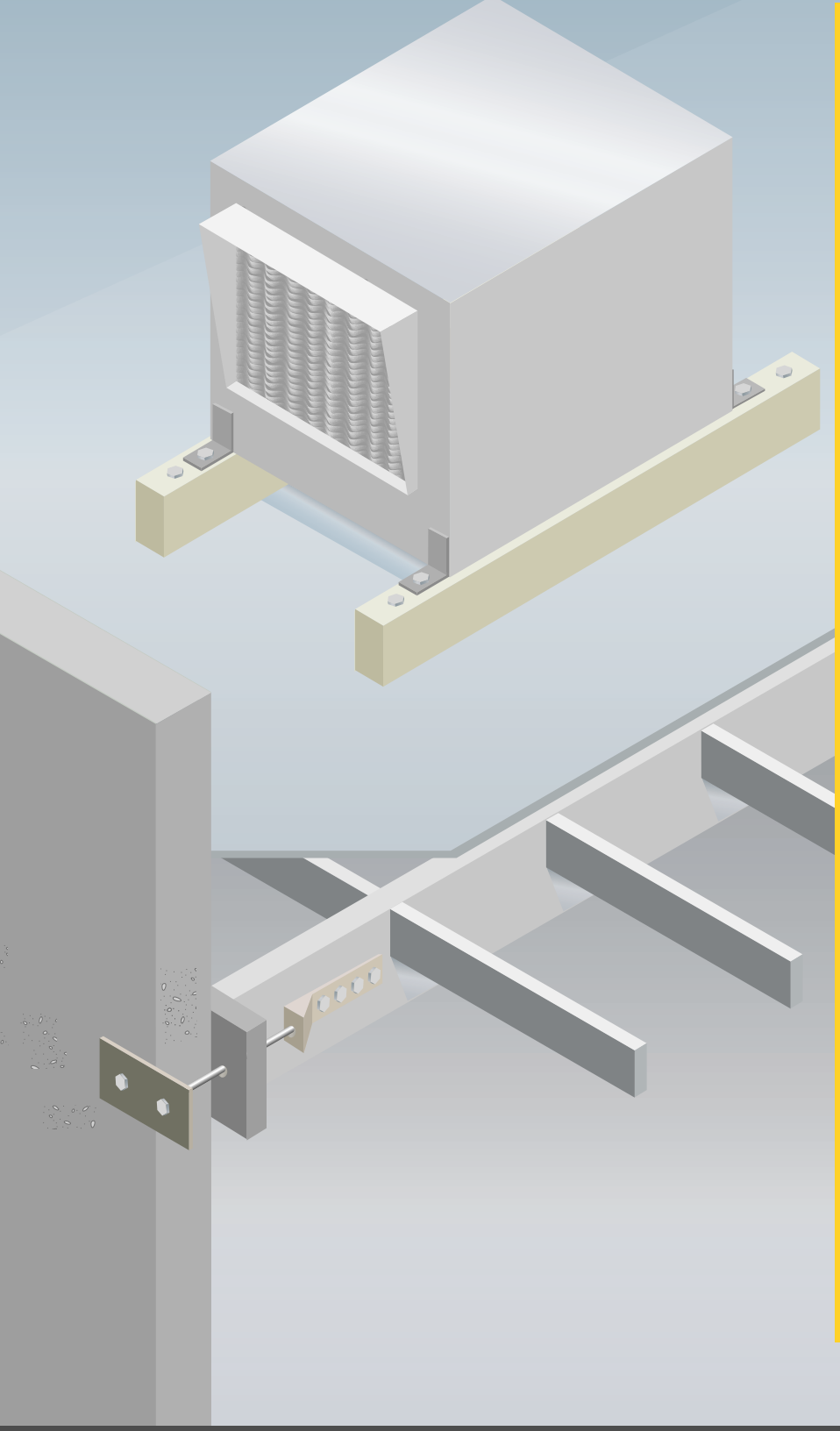

Prepared by

ATC/SEAOC Joint Venture

Funded by

California Seismic Safety Commission
Proposition 122 Retrofit Practices
and Improvement Program

Built to Resist Earthquakes

The Path to Quality Seismic Design and Construction for Architects

Engineers

Inspectors

ATC/SEAOC Joint Venture

California Seismic Safety Commission

Built to Resist Earthquakes

BUILT TO RESIST EARTHQUAKES

ATC/SEAOC Training Curriculum: The Path to Quality Seismic Design and Construction

Prepared by

ATC/SEAOC JOINT VENTURE
(A Partnership of the Applied Technology Council and
the Structural Engineers Association of California)
555 Twin Dolphin Drive, Suite 550
Redwood City, California 94065

Funded by

CALIFORNIA SEISMIC SAFETY COMMISSION
Proposition 122 Seismic Retrofit Practices Improvement Program, Product 4.1
Henry Reyes, Project Officer

PROJECT MANAGER
Christopher Rojahn

DEPUTY PROJECT MANAGER
Allen Goldstein

PROJECT CONSULTANTS
James Russell, Manager
Eric Brown
Kelly Cobeen
Craig Comartin
Richard Drake
Tim McCormick
Evan Reis
Kit Wong
Ryan Yee

TECHNICAL ADVISORY PANEL
Donald Clark
Gary McGavin
Richard Phillips
Scott Stedman
Tim Steenson
Eric Tolles

CALIFORNIA SEISMIC SAFETY COMMISSION OVERSIGHT PANEL
Lowell Shields, Chairman
Ross Cranmer
William Gates
Robert Hamilton
Fred Herman
Wilfred Iwan
Roy Johnston
David Martinez
Frank McClure
Joel McRonald
Steve Patterson
Stuart Posselt
Daniel Shapiro
Patricia Snyder, ex officio
Fred Turner, ex officio

1999

Applied Technology Council

The Applied Technology Council (ATC) is a nonprofit, tax-exempt corporation established in 1971 through the efforts of the Structural Engineers Association of California. ATC's mission is to develop state-of-the-art, user-friendly engineering resources and applications for use in mitigating the effects of natural and other hazards on the built environment. ATC also identifies and encourages needed research and develops consensus opinions on structural engineering issues in a nonproprietary format. ATC thereby fulfills a unique role in funded information transfer.

ATC is guided by a Board of Directors consisting of representatives appointed by the American Society of Civil Engineers, the National Council of Structural Engineers Associations, the Structural Engineers Association of California, the Western Council of Structural Engineers Associations, and four at-large representatives concerned with the practice of structural engineering. Each director serves a three-year term.

Project management and administration are carried out by a full-time Executive Director and support staff. Project work is conducted by a wide range of highly qualified consulting professionals, thus incorporating the experience of many individuals from academia, research, and professional practice who would not be available from any single organization. Funding for ATC projects is obtained from government agencies and from the private sector in the form of tax-deductible contributions.

1999-2000 ATC Board of Directors

Edwin T. Dean, President
Arthur N.L. Chiu, Vice President
Andrew T. Merovich, Secretary/Treasurer
Charles H. Thornton, Past President
James R. Cagley
Robert G. Dean
James M. Delahay
Edwin H. Johnson
Newland J. Malmquist
Stephen H. Pelham
Richard J. Phillips
Maryann T. Phipps
Charles Roeder
C. Mark Saunders
Jonathan G. Shipp

ATC/SEAOC Joint Venture

(A Partnership of the Applied Technology Council and the Structural Engineers Association of California)

The ATC/SEAOC Joint Venture was formed in 1997 to conduct the California Seismic Safety Commission Product 4.1 project, “Seismic Safety Continuing Education of Building Design and Code Enforcement Professionals,” part of the Proposition 122 Seismic Retrofit Practices Improvement Program.

Joint Venture Management Committee

Christopher Rojahn (ATC), Chairman
Allen Paul Goldstein (SEAOC)
Richard J. Phillips (ATC)
Scott A. Stedman (SEAOC)

Structural Engineers Association of California

It is the mission of the Structural Engineers Association of California (SEAOC) to advance the structural engineering profession; to provide the public with structures of dependable performance through the application of state-of-the-art structural engineering principles; to assist the public in obtaining professional structural engineering services; to promote natural hazard mitigation; to provide continuing education and encourage research; to provide structural engineers with the most current information and tools to improve their practice; and to maintain the honor and dignity of the profession.

1998-1999 SEAOC Board of Directors

John G. Shipp, President
Ronald O. Hamburger, President-Elect
Manuel Morden, Secretary
Joseph R. Sutton, Treasurer
Kenneth A. Luttrell, Past President
Jack E. Bruce
Patrick Buscovich
Daniel Korntved
James S. Lai
Edwin J. Nicholson
John E. Paquette
H. John Price
Douglas S. Thompson
Chris V. Tokas
Simon L. Wong

Disclaimer

While the information presented in this report is believed to be correct, the Applied Technology Council, the Structural Engineers Association of California, and the California Seismic Safety Commission assume no responsibility for its accuracy or for the opinions expressed herein. The material presented in this publication should not be used or relied upon for any specific application without competent examination and verification

of its accuracy, suitability, and applicability by qualified professionals. Users of information from this publication assume all liability arising from such use.

Preface

In August 1997 the ATC/SEAOC Joint Venture, a partnership of the Applied Technology Council (ATC) and the Structural Engineers Association of California (SEAOC) was awarded a 23-month contract by the California Seismic Safety Commission (CSSC) to develop a program for “Seismic Safety Continuing Education of Building Design & Code Enforcement Personnel.” Funding for the project was provided by the Proposition 122 Seismic Retrofit Practices Improvement Program.

The primary product of the project was this training curriculum notebook, *Built to Resist Earthquakes—The Path to Quality Seismic Design and Construction of Buildings for Architects, Engineers, and Building Officials*, which is intended to serve as a resource for continuing education. The curriculum consists of several hundred pages of training materials pertaining to the seismic design and retrofit of (1) wood-frame buildings, (2) concrete and masonry construction, and (3) nonstructural components. Included are:

- Six multi-part, two-color Briefing Papers — concise, easy-to-read summary overviews of important issues and topics intended to facilitate improvement in the quality of seismic design, inspection, and construction;

- Detailed, illustrated, instructional material (lessons) describing how to improve the quality of seismic design, inspection, construction and retrofit; and

- Job Aids — check lists and other tools to facilitate job performance, including construction observation, special inspection, and quality assurance procedures.

During the project the ATC/SEAOC Joint Venture also conducted a "Workshop on Roles and Responsibilities of Architects, Building Officials, and Engineers in the Building Seismic Design, Construction, and Retrofit Process" (summarized in Briefing Paper 2) and commenced a series of "Continuing Education Training Seminars on Improving the Quality of Building Seismic Design and Construction." The initial pilot seminars were held on June 17 and June 21, 1999 in Concord and the City of Commerce, California, respectively.

The ATC/SEAOC Joint Venture gratefully acknowledges the numerous individuals involved in the project. Christopher Rojahn and Allen Goldstein served as Project Manager and Deputy Project Manager, respectively. Detailed developmental work was carried out by: James Russell, who served as manager for curriculum development and lead consultant for building regulatory curriculum development; Craig Comartin, who served as lead consultant for design professional curriculum development; Kit Wong, who served as curriculum and technical publications development consultant; Ryan Yee, who served as an educational consultant; and five curriculum development consultants: Eric Brown, Kelly Cobeen, Richard Drake, Tim McCormick, and Evan Reis. Technical overview and guidance were provided by the ATC/SEAOC Joint Venture Technical Advisory Panel, which consisted of Donald Clark, Gary McGavin, Richard Phillips, Scot Stedman, Tim Steenson, and Eric Tolles. Project oversight was provided by the California Seismic Safety Commission Oversight Panel, which consisted of Lowell Shields (Chairman), Ross Cranmer, William Gates, Robert Hamilton, Fred Herman, Wilfred Iwan, Roy Johnston, David Martinez, Frank McClure, Joel McRonald, Steve Patterson (past panel member), Stuart Posselt, Daniel Shapiro, Patricia Snyder (ex-officio), and Fred Turner (ex-officio). Briefing Paper, curriculum, and Job Aid production was carried out by A. Gerald

Brady, Peter Mork, and Michelle Schwartzbach of the ATC office, and Kit Wong and Tiffany Calvert of Vickerman-Zachary-Miller/Transystems. Christopher Arnold, John Henry, Timothy McCormick, Evan Reis, James Russell, and Joe Uzarski served as speakers in the initial pilot training seminars held in June 1999. Lori Campbell, Cheryl Jodar, Patricia Mork, and Bernadette Mosby provided administration and coordination services for all aspects of the project, including the training seminars.

The ATC/SEAOC Joint Venture also gratefully acknowledges Henry Reyes, Seismic Safety Commission Project Officer, for his insight, input, and patience throughout the project.

Christopher Rojahn, Chairman
ATC/SEAOC Joint Venture Management Committee

Training Curriculum Notebook Contents

Preface i

Executive Summary 1

Illustration Credits 9

Introductory Material ..... Tab 1

Introduction to the Curriculum Materials

Briefing Paper 1: Building Safety and Earthquakes

Briefing Paper 2: Roles & Responsibilities of Engineers, Architects, and Code Enforcement Officials

Wood Frame Construction ..... Tab 2

Briefing Paper 3: Seismic Response of Wood-Frame Construction

Lesson W1: The Load Path in Wood-Frame Construction

Lesson W2: Improving the Earthquake Performance of Wood-Frame Construction

Lesson W3: Seismic Retrofitting of Wood-Frame Construction—Special Considerations

Job Aid: Inspection Checklist for Wood-Frame Shear Walls

Concrete and Masonry Construction ..... Tab 3

Briefing Paper 4: Seismic Response of Concrete and Masonry Construction

Lesson C1: The Load Path in Concrete and Masonry Construction

Lesson C2: Improving the Earthquake Performance of Concrete and Masonry Construction

Lesson C3: Seismic Rehabilitation of Concrete and Masonry Construction—Special Considerations

Job Aid: Designer Checklist for Masonry Construction

Job Aid: Inspection Checklist for Masonry Construction

Job Aid: Class B Lap Splice Table

Non-structural Building Components ..... Tab 4

Briefing Paper 5: Seismic Response of Nonstructural Components

Briefing Paper 6: Seismic Code Requirements for Anchorage of Nonstructural Components

Lesson N1: General Seismic Considerations of Nonstructural Building Components

Lesson N2: Improving the Earthquake Performance of Typical Nonstructural Building Components

Job Aid: Standard Details for Bracing of Suspended Ceilings and Standard Detail for Bracing Interior Non-load Bearing Partitions, with supporting documentation conforming to the 1997 *Uniform Building Code*

Job Aid: Coordination Matrix for Building Component Anchorage or Bracing

Appendices ..... Tab 5

Appendix A: Project Participants

Appendix B: Applied Technology Council Projects and Report Information

Executive Summary

1. Introduction and Background

In August 1997 the ATC/SEAOC Joint Venture, a partnership of the Applied Technology Council (ATC) and the Structural Engineers Association of California (SEAOC) was awarded a 23-month contract by the California Seismic Safety Commission (CSSC) to develop a program for "Seismic Safety Continuing Education of Building Design & Code Enforcement Personnel." Funded by the Proposition 122 Seismic Retrofit Practices Improvement Program, the approach for the project has been designed to fill the project objectives outlined in the original CSSC Request for Proposal:

- Develop and partially implement a training program for building design professionals and building regulatory officials to improve construction quality and thereby earthquake resistance of new and retrofitted buildings in California.
- Develop training materials that provide a clear understanding of earthquake effects on buildings and link earthquake effects to specific job responsibilities.
- Develop training strategies that: (a) have clearly established goals; (b) focus on job performance; (c) provide the big picture; (d) include field materials and other useful job aids; and (e) are organized to allow transfer to others.
- Develop strategies that improve delivery of training: (a) utilize new technology; (b) promote active participation; and (c) provide more "hands on approaches" (i.e., learning by doing).

The target audience for the training program consists of building officials and inspectors, architects, and engineers with an interest in seismic retrofit of buildings, particularly those who have entered practice within the last five to ten years.

Based on numerous meetings and discussions with the Commission Oversight Panel and the ATC/SEAOC Technical Advisory Panel, it was decided early on that the project would focus on wood-frame, concrete, and masonry buildings. Dwellings and low-rise commercial buildings constructed of these materials have performed poorly in recent California earthquakes, in large part because of the poor quality of seismic design and construction. The focus of the project also included nonstructural components, which have been extensively damaged in recent earthquakes, and the specific roles and responsibilities of building officials, architects, and structural engineers in the seismic design, inspection, and construction process. Roles and responsibilities were included because critical aspects of the design and construction process have frequently been missed or incorrectly carried out due to the lack of clarity as to which discipline was responsible for carrying out a given design, inspection, or construction task. The project advisory groups also recommended that the results of the project be applicable to both the design and construction of the retrofit of existing buildings as well as new buildings, with a slight tilt in favor of retrofit guidance and training.

Steel-frame buildings were excluded from the project for budgetary reasons and because of the extensive ongoing research and development work being carried out on this construction type as a result of the failure of welded connections in steel moment-frame buildings during the 1989 Loma Prieta and 1994 Northridge, California, earthquakes. Funded by the Federal Emergency Management Agency (FEMA), that effort will include training seminars (to be commenced in the year 2000) and is being conducted by the SAC Joint Venture, a partnership of the Structural Engineers Association of

California, the Applied Technology Council, and California Universities for Research in Earthquake Engineering.

2. Project Results

The primary product of this project is this training curriculum notebook, *Built to Resist Earthquakes—The Path to Quality Seismic Design and Construction for Architects, Engineers, and Building Officials*, which is intended to serve as a resource for continuing education of building department personnel, architects, and engineers. During the project the ATC/SEAOC Joint Venture also conducted a "Workshop on Roles and Responsibilities of Architects, Building Officials, and Engineers in the Building Seismic Design, Construction, and Retrofit Process" and commenced a series of "Continuing Education Training Seminars on Improving the Quality of Building Seismic Design and Construction." These products and activities are described in detail below.

Curriculum Notebook. This curriculum notebook contains three principal sections, one each for wood-frame buildings, concrete and masonry buildings, and nonstructural components. Each section contains (1) one or more technical and non-technical Briefing Papers, which are concise, easy-to-read summary overviews of important issues and topics intended to facilitate improvement in the quality of seismic design, inspection, and construction, (2) detailed textual and illustrated instructional material (lessons) pertaining to building seismic design, inspection, construction and retrofit; and (3) one or more Job Aids, which consist of laminated check lists and other tools to facilitate job performance, including construction observation, special inspection, and quality assurance procedures.

Briefing Papers. The two-color Briefing Papers, divided into parts containing no more than four pages, have been designed to be distributed in newsletters of professional associations such as SEAOC, California Building Officials, and the California Council, American Institute of Architects. The Briefing Papers are also available free of charge on ATC's world-wide web site (www.atcouncil.org), from where they can be downloaded in color (PDF format). The Briefing Papers (see sample in Figure 1), cover the following topics:

- **Briefing Paper 1:** Building Safety and Earthquakes (Parts A, B, C, and D)
- **Briefing Paper 2:** Roles and Responsibilities of Engineers, Architects, and Code Enforcement Officials (Parts A and B)
- **Briefing Paper 3:** Seismic Response of Wood-Frame Construction (Parts A, B and C)
- **Briefing Paper 4:** Seismic Response of Concrete & Masonry Buildings (Parts A, B, C, and D)
- **Briefing Paper 5:** Seismic Response of Nonstructural Components (Parts A, B and C)
- **Briefing Paper 6:** Seismic Code Requirements for Anchorage of Non-structural Components (Parts A and B)

Instructional Materials. The heart of the curriculum notebook is a compendium of instructional materials (lessons) on seismic design, inspection, construction and retrofit of wood frame buildings, concrete and masonry buildings, and building nonstructural components. These materials consist of in-depth text descriptions of various issues and approaches for improving the quality of seismic design and construction. The textual information is supplemented with drawings and illustrations of the discussion points as well as photographs and other graphical information. A sample of the instructional materials is provided in Figure 2. Following is a list of the lessons (with subsections) included in the curriculum notebook.

- **Lesson W1:** The Load Path in Wood-Frame Construction
- **Lesson W2:** Improving the Earthquake Performance of Wood-Frame Construction
  Section 2.1: Diaphragms
  Section 2.2: Shear Walls

Built to Resist Earthquakes

The Path to Quality Seismic Design and Construction

Briefing Paper 3

Seismic Response of Wood-Frame Construction

Part A: How Earthquakes Affect Wood Buildings

Introduction

This Briefing Paper 3, *Seismic Response of Wood-Frame Construction*, consists of three parts that discuss how earthquakes affect wood-framed construction, including specifics regarding their earthquake-resisting elements, and identifies construction features required for good seismic performance. This Part A provides a brief overview of how earthquakes affect wood-frame construction and explains the load path in wood construction. Part B describes diaphragm chords and collector elements, lateral force transfer within diaphragms, and lateral force transfer from diaphragms to shear walls or frames. Part C discusses wood-framed, shear-wall construction including stiffness issues and hold-downs.

Earthquake Performance of Wood-Frame Buildings

Buildings are at rest when an earthquake arrives, and then are suddenly accelerated laterally by horizontal earthquake ground motion (Figure 1). The ground shaking is transferred to the building through its foundation. Although displacements are easier to visualize, it is the acceleration of the foundation being transferred to the entire building structure that causes forces to develop in the building structure as it attempts to resist the movement.

Earthquake ground motions can contain a similar period of vibration to that of the building and resonating motions will increase the resulting forces. Wood buildings are generally low-rise and use resisting systems like plywood shear walls that result in very short fundamental periods of vibration. Shallow earthquakes with particularly strong short-period motions are common in California and can strongly affect wood-frame buildings. This is especially true when a short-period building is close to the epicenter, and is subjected to "near source" ground motions, which are particularly rich in short-period waves (for more information on earthquake ground motions, see Briefing Paper 1, Part A).

Modern wood-frame buildings generally have good earthquake performance, but older construction can exhibit serious deficiencies that have resulted in deaths and serious injuries. Large apartment buildings with parking at ground level have collapsed and killed some of the occupants. Older houses often have a weakness in the cripple wall below the first-floor framing that can cause collapse of the cripple-wall level, or crawl space. While not usually life threatening, such damage can be very expensive to repair. Even newer construction in areas near active faults that were designed prior to enforcement of the 1997 *Uniform Building Code* (UBC) may not perform as well as expected.

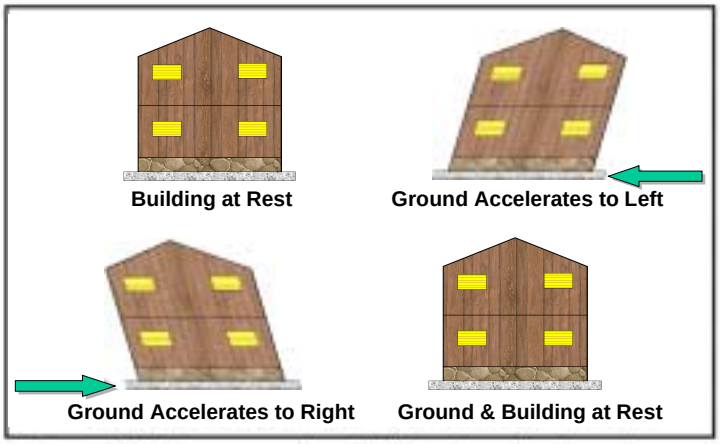

Figure 1. Cyclic response of wood buildings to earthquake motions.

Briefing Paper 3, Part A
ATC/SEAOC Joint Venture Training Curriculum
1

Figure 1. Briefing Paper sample: page 1 of Briefing Paper 3, Part A.

Lesson W2: Improving the Earthquake Performance of Wood-Frame Construction

2.3 Connections between Seismic Elements

The objective of this section is to enable designers, plan-check engineers and inspectors to visualize the complete load path in wood-frame construction and to explain the details of typical connections occurring along that path from the roof level to the foundation.

Diaphragms and shear walls alone are not able to resist seismic forces without proper connection. Each portion of a building generates a seismic force that needs to be transmitted through a defined load path to the building foundation. This load path is achieved by taking the following steps.

- Connecting each building portion to a diaphragm or shear wall
- Providing connections between diaphragms and shear walls
- Connecting shear walls between story levels and to the foundation

This section 2.3 discusses the last two types of connections listed above, linking the two primary lateral-force elements (diaphragms and shear walls) discussed in Sections 2.1 and 2.2.

Wood-frame construction contains a wide variety of seismic load path connections. This section discusses and depicts with drawings some examples of typical connections. Because the load path contains so many connections, Section 2.3 is divided into the following three categories of connection locations.

- Roof diaphragm connections to top-story shear walls
- Upper-story shear-wall connections to a floor diaphragm and to lower-story shear walls
- Bottom-story shear-wall connections to the foundation.

In addition, this section also discusses special design forces for connections when shear walls are not vertically continuous between story levels.

2.3.1 Roof to Wall Connections

Issues and Concerns. The roof diaphragm must be properly connected to top-story shear walls. The connection conditions occurring along exterior wall lines are different from those occurring at interior shear-wall locations. The direction of roof framing relative to the shear walls below (parallel or perpendicular), and the height of exterior and interior walls relative to the roof framing also create conditions that must be specifically detailed on drawings. Retrofit considerations include adding new framing members and adding fastening between the roof sheathing and framing without disturbing roof coverings.

A. Discussion and Examples

Roof Diaphragm Connections to Exterior Walls

Figure W2-15 shows a roof eave condition that is very common. In the figure, Item 1 is the diaphragm sheathing edge or boundary fastening to the eave blocking. Item 2 is the blocking fastening to the top plates. Items 1 and 2 complete the roof sheathing fastening to the diaphragm boundary member. Item 3 is the shear-wall sheathing fastening to the double top plates, which completes the diaphragm-to-shear-wall load path.

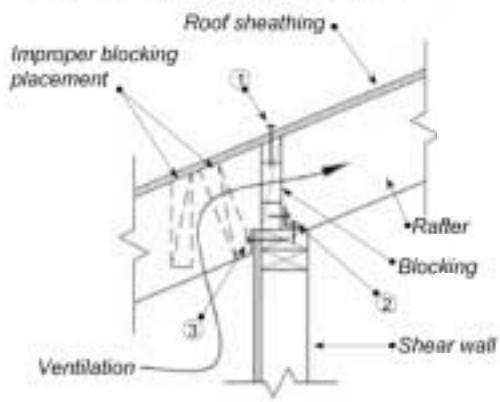

Notes:
1. Roof diaphragm sheathing edger boundary fastening to blocking
2. Blocking fastening to top plates
3. Shear-wallsheathing fastening to top plates

FigureW2-15 Roof connection to exterior wall at eave

ATC/SEAOC Joint Venture Training Curriculum: The Path to Quality Seismic Design and Construction W-43

Figure 2. Curriculum sample

Section 2.3: Connections between Seismic Elements
Section 2.4: Foundation Systems
Section 2.5: Irregular Configurations
Section 2.6: Design Issues in Buildings with Concrete or Masonry Walls

- **Lesson W3:** Seismic Retrofitting of Wood Frame Construction—Special Considerations
  Section 3.1: Retrofitting Multi-Family Residential Buildings with Soft First Story
  Section 3.2: Out-of-Plane Anchorage Retrofit of Diaphragm-to-Wall Connections in Concrete and Masonry-Wall Buildings
- **Lesson C1:** The Load Path in Concrete and Masonry Construction
- **Lesson C2:** Improving the Earthquake Performance of Concrete and Masonry Construction
  Section 2.1: Masonry Construction (Materials and Placement)
  Section 2.2: Reinforced Concrete Construction (Materials, Cast-in-Place Concrete Placement, Shotcrete, Precast Concrete)
  Section 2.3: Reinforcing Steel
- **Lesson C3:** Seismic Retrofitting Issues in Concrete and Masonry Construction — Special Considerations
  Section 3.1: In-Situ Testing and Material Properties
  Section 3.2: Unforeseen Conditions
  Section 3.3: Fiber-Reinforced Composite Systems
- **Lesson N1:** General Seismic Considerations of Nonstructural Building Components
- **Lesson N2:** Improving the Earthquake Performance of Typical Nonstructural Building Components
  Section 2.1: Architectural: Interior Suspended Ceilings
  Section 2.2: Architectural: Interior Partitions
  Section 2.3: Architectural: Glazing
  Section 2.4: Architectural: Glass Block and other Nonstructural Masonry
  Section 2.5: Architectural: Cladding
  Section 2.6: Architectural: Parapets
  Section 2.7: Mechanical/Electrical: Floor- or Roof-Mounted Equipment
  Section 2.8: Mechanical/Electrical: Suspended Equipment, Ducts and Pipes
  Section 2.9: Mechanical: Water Heaters
  Section 2.10: Electrical: Interior Lights

Job Aids. Job Aids, which were developed for various specific disciplines within the broader intended audience for this project, are included in the curriculum notebook and correlated to specific lessons. The textual Job Aids, such as check lists (see sample in Figure 3), are presented in two-color format and are laminated for repeated use and long-term durability. The idea is that users would frequently withdraw the Job Aids from the notebook, use them in the office or in the field, and return them to the notebook for storage until the next application. Following is a list of Job Aids provided in the curriculum notebook:

- **Job Aid for Wood-Frame Construction:** Inspection Checklist for Wood-Frame Shear Walls
- **Job Aids for Masonry Construction:** (1) Designer Checklist for Masonry Construction; (2) Inspection Checklist for Masonry Construction
- **Job Aid for Concrete Construction:** Class B Lap Splice Table
- **Job Aids for Nonstructural Components:** (1) Standard Detail for Bracing of Suspended Ceilings and Standard Detail for Bracing Interior Non-Load-Bearing Partitions, with supporting documentation conforming to the 1997 *Uniform Building Code;* (2) Roles & Responsibilities Coordination Matrix for Nonstructural Building Component Seismic Anchorage or Bracing

Job Aid:
Inspection Checklist for Wood Frame Shear Walls

1. **Verify from the structural framing plans and architectural floor plans the location and length of all shear walls**

2. **Verify the nailing of the sheathing agrees with the shear wall schedule**

   - Nail Type (common, galvanized box);
   - Nail Diameter (8d or 10d);
   - Nail Length (minimum penetration into framing 12 times nail diameter)
   - Spacing Along Each Edge of Each Piece of Sheathing (6", 4", 3" etc.)
   - Nail Head Shape (clipped heads not permitted)
   - Nail Placement
     - __ Driven flush but not overdriven
     - __ Minimum 3/8" from sheathing edge to center of nail
     - __ View the stud side to check for nails that missed framing
     - __ Staggered along edges where spacing is 3 inches o.c. or less
     - __ Edge nails into hold-down post

3. **Verify sheathing material agrees with the structural notes**

   - Type (Plywood or OSB);
   - Grade (APA Rated Panel or APA Rated Panel - Structural I) and
   - Thickness (3/8", 15/32")
   - Number of Plys (If specified for plywood)

4. **Verify lumber size and grade agrees with the structural notes**

   - Framing Grade of Studs & Posts (Stud, Construction, No. 2, No. 1);
   - Lumber Species (Douglas Fir Larch, Hem-Fir)
   - Framing Size (3x studs, sill at heavily nailed edges, 2-2x, 4x or 6x at HD posts)

5. **Verify bottom of wall shear transfer (sill/sole plate) connection is based on the structural notes or specific sections and details**

   - Nailing size and spacing of wall sole plate to floor framing below from shear wall schedule; verify nails penetrate framing below
   - Foundation sill bolt diameter and spacing from shear wall schedule or notes
   - Bolts not less than 7 bolt diameters from ends of sill piece; not more than 12 inches from ends; not less than 1 inch from edge of sill plate; not less than 1 1/2 inches to edge of concrete foundation.
   - Verify square plate washer is used on bolts.
   - Verify bolt hole in sill plate is not more than 1/16" larger than bolt diameter.

ATC/SEAOC Joint Venture Training Curriculum:
The Path to Quality Seismic Design and Construction

Side 1

Figure 3. Job Aid sample: side 1 of Inspection Checklist for Wood-Frame Shear Walls

Workshop on Roles and Responsibilities. The purpose of the 1-day Workshop on Roles and Responsibilities of Design and Code Enforcement Professionals, conducted on January 20, 1999 in Oakland, California, was to provide a forum where each of the project's three primary audiences (architects, engineers and code enforcers) could interact and discuss ways to improve the quality of seismic design, inspection and construction of new buildings and the retrofit of existing buildings. The Workshop was attended by 24 invited participants, with a reasonably equal representation from the following disciplines: architects, building officials and inspectors, contractors, and structural engineers. Prior to the Workshop the organizers commissioned a set of three position papers, or viewpoint papers, one each by an architect, a structural engineer, and a building official, to define specific issues and recommend potential solutions. These position papers were then presented verbally at the Workshop and served as a starting point to stimulate discussion by the Workshop participants. The one-day Workshop was also structured to include ample time for discussion of the issues identified in the position papers, to identify additional issues, and to resolve to the extent possible those issues considered of highest priority by the Workshop participants.

The findings of the Workshop are summarized in Briefing Paper 2 and are documented in the Workshop Proceedings (ATC/SEAOC Joint Venture, 1999). One of the major findings of the Workshop was the recommendation to prepare a Roles & Responsibilities Coordination Matrix for Nonstructural Building Component Seismic Anchorage or Bracing. This matrix was prepared as part of the ATC/SEAOC Joint Venture project and is included in the curriculum notebook as a Job Aid.

Training Seminars. The continuing education program developed under this project is intended as a long-term effort that will be implemented for years to come. The primary mechanism for disseminating information developed during the project is a series of "Continuing Education Training Seminars on Improving the Quality of Seismic Design and Construction." These seminars are being planned by the ATC/SEAOC Joint Venture and will be conducted throughout California on a periodic basis. In some instances, the seminar programs will be designed for all three intended audiences for the project (building officials, architects, and engineers), whereas in other instances the seminar program will be tailored to a specific audience. A registration fee to cover the cost of seminar handouts (curriculum notebook), speaker fees and travel, registration, meeting room, a/v equipment, and refreshments (approximately $125 in 1999 dollars) will be charged to each participant. Net proceeds from the seminars will be deposited in a restricted fund maintained by the ATC/SEAOC Joint Venture to be used to update the contents of the curriculum notebook as new information and techniques become available.

The first two training seminars were conducted on June 17, 1999, in Concord (San Francisco Bay area), and June 21, 1999, in the City of Commerce (Los Angeles area). The announced purpose of each 1-day seminar (the same seminar was given in both locations) was to provide practical guidance for improving the quality of seismic design, inspection, and retrofit of buildings. The first two seminars were considered as pilot efforts. The program consisted of three concurrent sessions, one each for architects, engineers, and building department personnel. In each session, participants were introduced to the training curriculum, including the Briefing Papers and Job Aids. The lectures were presented by speakers selected for their knowledge of the subject and their ability to present the training curriculum in a clear, concise, and exciting way. Building systems and components addressed included: wood-frame buildings, concrete and masonry buildings, and nonstructural components. The seminar also addressed the roles and responsibilities of architects, engineers, and building officials in ensuring quality seismic design and installation of nonstructural components. The Joint Venture also videotaped selected seminar sessions.

Illustration Credits

Figure*	Source
BP1A-1	Algermissen, S.T., 1983, *An Introduction to the Seismicity of the United States*, EERI, Oakland, California.
BP1A-2	Chopra, A. K., 1981, *Dynamics of Structures*, A Primer, EERI, Oakland, California.
BP1A-3, BP1B-1, BP3A-1, BP3A-2, , BP3C-2, BP3C-5	Wiss Janney Elstner Associates, March 1995, *Seismic Retrofit Training for Building Contractors and Building Inspectors*, Participants' Handout.
BP1B-2, BP1D-3, BP5B-2, BP5B-3, N1-2, N1-4, N2-2, N2-6 thru N2-10	VZM-Transystems, Inc., Oakland, California
BP1B-3	Stratta, J. L., *Manual of Seismic Design*, 1987, Prentice-Hall, Englewood Cliffs, New Jersey.
BP1C-1	ATC-21 Report**
BP1D-1, W2-43 thru W2-45, BP4-1, BP4A-2, BP4B-1, BP4C-1, BP4C-4, C1-2, C1-3, C1-7, C1-9, C1-10, C1-11	Craig Comartin, Comartin-Reis Engineers, Palo Alto, California.
BP1D-2, BP3B-1	Fanella, D.A., and J.A. Munshi, 1998, *Design of Low-Rise Concrete Building for Earthquake Forces*, Portland Cement Association, Skokie, Illinois.
BP2A-1, BP2A-2, BP3B-4, W2-46, W2-50, W2-52, BP4B-2, BP4C-4 (i.e., BP4C-3), C1-1, C1-4, C1-5, C1-6, C1-8, C2-18, BP5A-1, BP5A-3, BP5B-1, BP5B-4, BP5C-2, BP6B-1, N1-1, N1-5 thru N1-7, N1-10 thru N1-12, N2-1, N2-13	Earthquake Engineering Research Institute, Oakland, California.
BP3B-5, BP3C-3, BP3C-4, BP3C-3, W1-1 thru W1-5, W2-1, W2-3 thru W2-9, W2-12 thru W2-42, W2-51	Kelly Cobeen, GFDS Engineers, San Francisco, California.
BP3C-1, W2-48, BP5A-2, N1-8, N2-14	Applied Technology Council, Redwood City, California.
W2-2, W2-10, W2-11,	International Conference of Building Officials, Whittier, California.
W2-47, W2-49	ATC-20 Report**
BP4C-2	ATC-21-T Training Manual**

C2-1 thru C2-13	MIA, 1995, *Reinforced Concrete Masonry Construction Inspector's Handbook*, Third Edition, Masonry Institute of America, Los Angeles, California.
C2-14, C2-15, C2-17, C2-18	Evan Reis, Comartin-Reis Engineers, Palo Alto, California.
C2-20	Concrete Reinforcing Steel Institute, 1996, *Design Handbook*, 8th Edition, Schaumburg, Illinois.
BP5B-5, BP5C-1, BP5C-3, N1-9, N1-13, N2-3, N2-17, N2-20 thru N2-24, N2-34 thru N2-40, N2-44	FEMA 172 Report, *NEHRP Handbook for Techniques for Seismic Rehabilitation of Existing Buildings.*
BP5C-4, N2-33	FEMA 74 Report, *Reducing the Risks of Nonstructural Earthquake Damage.*
BP6A-1 thru BP6A-4, N2-25 thru N2-28	Kit Wong, VZM/Transystems, Oakland, California.
C2-15	American Society for Testing and Materials, Philadelphia, Pennsylvania.
N1-3, N2-5	ATC-29-1 Report**
N2-4, N2-11, N2-15, N2-16, N2-46, N2-48 thru N2-51	ATC-26-4 Report, *USPS Procedures for Building Seismic Rehabilitation* (Interim).
N2-12	American Plywood Association (Karl Steinbrugge collection), Tacoma, Washington.
N2-18, N2-19	Fluor-Daniel, Irvine, California.
N2-29, N2-30	Eric Brown, Hillman Biddison and Loevenguth, Los Angeles, California.
N2-41 thru N2-43	ATC-29 Report**
N2-47	California Seismic Safety Commission, 1998 *Homeowner's Guide to Seismic Safety,* Sacramento, California.

* Figure number syntax code:

BPnp-n	**B**riefing **P**aper, **n**umber, **p**art, figure **n**umber
Ws-n	**W**ood Frame Construction, **s**ection, figure **n**umber
Cs-n	**C**oncrete and Masonry Construction, **s**ection, figure **n**umber
Ns-n	**N**onstructural Building Components, **s**ection, figure **n**umber

** See Appendix B for details on ATC publications

NOTE: In the preparation of this notebook, individual authors have listed as references and resources the appropriate publications where some illustrations can be found. A number of illustrations are therefore at present not individually credited.

Table of Contents

1	Introductory Material
2	Wood Frame Construction
3	Concrete and Masonry Construction
4	Nonstructural Components
5	Appendices

Table of Contents – Introductory Material

Introduction to the Curriculum Materials 1-1

Briefing Paper 1: Building Safety and Earthquakes

A. Earthquake Shaking and Building Response

B. Earthquake Forces in Buildings

C. Earthquake Resisting Systems

D. The Seismic Load Path

Briefing Paper 2: Roles and Responsibilities of Engineers, Architects, and Code Enforcement Officials

A. The Need for Improved Coordination

B. Identification and Resolution of Major Issues

Introduction to the Curriculum Materials

This document contains the results of a two-year long project funded by the California Seismic Safety Commission (CSSC) to develop a Continuing Education Seismic Safety Program for Building Design and Code Enforcement Professionals. Funded by the Proposition 122 Seismic Retrofit Practices Improvement Program, the approach for the project has been designed to fill the project objectives outlined in the original CSSC Request for Proposal:

- Develop and partially implement a training program for building design professionals and building regulatory officials to improve construction quality and thereby earthquake resistance of new and retrofitted buildings in California.
- Develop training materials that provide a clear understanding of earthquake effects on buildings and link earthquake effects to specific job responsibilities.
- Develop training strategies that: (a) have clearly established goals; (b) focus on job performance; (c) provide the big picture; (d) include field materials and other useful job aids; and (e) are organized to allow transfer to others.
- Develop strategies that improve delivery of training: (a) utilize new technology; (b) promote active participation; and (c) provide more "hands-on approaches" (i.e., learning by doing).

Based on numerous meetings and discussions with the Commission Oversight Panel and the ATC/SEAOC Technical Advisory Panel, it was decided early on that the project would focus on wood-frame, concrete, and masonry buildings. Dwellings and low-rise commercial buildings constructed of these materials have performed poorly in recent California earthquakes, in large part because of the poor quality of seismic design and construction. The focus of the project also included nonstructural components, which have been extensively damaged in recent earthquakes, and the specific roles and responsibilities of building officials, architects, and structural engineers in the seismic design, inspection, and construction process. Roles and responsibilities were included because critical aspects of the design and construction process have frequently been missed or incorrectly carried out due to the lack of clarity as to which discipline was responsible for carrying out a given design, inspection, or construction task. The project advisory groups also recommended that the results of the project be applicable to both the design and construction of the retrofit of existing buildings as well as new buildings, with a tilt in favor of retrofit guidance and training.

Steel-frame buildings were excluded from the project for budgetary reasons and because of the extensive ongoing research and development work being carried out on steel moment-frame buildings as a result of the failure of welded connections during the 1989 Loma Prieta and 1994 Northridge, California, earthquakes. Funded by the Federal Emergency Management Agency (FEMA), that effort will include training seminars (to be commenced in the year 2000) and is being conducted by the SAC Joint Venture, a partnership of the Structural Engineers Association of California, the Applied Technology Council, and California Universities for Research in Earthquake Engineering.

The primary product of this project is this training curriculum notebook, *Built to Resist Earthquakes—The Path to Quality Seismic Design and Construction for Architects, Engineers, and Building Officials*, which serves as a resource for continuing

education of building department personnel, architects, and engineers. During the project the ATC/SEAOC Joint Venture also conducted a "Workshop on Roles and Responsibilities of Architects, Building Officials, and Engineers in the Building Seismic Design, Construction, and Retrofit Process" and commenced a series of "Continuing Education Training Seminars on Improving the Quality of Building Seismic Design and Construction." These products and activities are described in detail below.

1. Curriculum Notebook

This curriculum notebook contains three principal sections, one each for wood-frame buildings, concrete and masonry buildings, and nonstructural components. Each section contains (1) one or more technical and non-technical Briefing Papers, which are concise, easy-to-read summary overviews of important issues and topics intended to facilitate improvement in the quality of seismic design, inspection, and construction, (2) detailed, illustrated instructional material (lessons) pertaining to building seismic design, inspection, construction and retrofit; and (3) one or more Job Aids, which consist of laminated check lists and other tools to facilitate job performance, including construction observation, special inspection, and quality assurance procedures.

The two-color Briefing Papers, divided into parts containing no more than four pages, have been designed to be distributed in newsletters of professional associations such as SEAOC, California Building Officials, and the California Council, American Institute of Architects. The Briefing Papers are also available free of charge on ATC's world-wide web site (www.atcouncil.org), from where they can be downloaded in color (PDF format). The Briefing Papers cover the following topics:

- **Briefing Paper 1:** Building Safety and Earthquakes (Parts A, B, C, and D)
- **Briefing Paper 2:** Roles and Responsibilities of Engineers, Architects, and Code Enforcement Officials (Parts A and B)
- **Briefing Paper 3:** Seismic Response of Wood-Frame Construction (Parts A, B and C)
- **Briefing Paper 4:** Seismic Response of Concrete and Masonry Buildings (Parts A, B, C, and D)
- **Briefing Paper 5:** Seismic Response of Nonstructural Components (Parts A, B and C)
- **Briefing Paper 6:** Seismic Code Requirements for Anchorage of Non-structural Components (Parts A and B)

The heart of the curriculum notebook is a compendium of instructional materials (lessons) on seismic design, inspection, construction and retrofit of wood-frame buildings, concrete and masonry buildings, and nonstructural building components. These materials consist of in-depth text descriptions of various issues and approaches for improving the quality of seismic design and construction. The textual information is supplemented with drawings and illustrations of the discussion points as well as photographs and other graphical information. The following lessons are provided:

- **Lesson W1:** The Load Path in Wood-Frame Construction
- **Lesson W2:** Improving the Earthquake Performance of Wood-Frame Construction
- **Lesson W3:** Seismic Retrofitting of Wood-Frame Construction—Special Considerations
- **Lesson C1:** The Load Path in Concrete and Masonry Construction
- **Lesson C2:** Improving the Earthquake Performance of Concrete and Masonry Construction

- **Lesson C3:** Seismic Retrofitting Issues in Concrete and Masonry Construction — Special Considerations
- **Lesson N1:** General Seismic Considerations of Nonstructural Building Components
- **Lesson N2:** Improving the Earthquake Performance of Typical Nonstructural Building Components

To facilitate use of the document, icons representing the three principal target audiences (architects, engineers, and code enforcement professionals) have been included in the curriculum lessons to highlight issues and recommendations pertinent to their daily jobs. The icons are listed as follows:

Architects

Engineers

Inspectors

Job Aids. Job Aids, which were developed for various specific disciplines within the broader intended audience for this project, are included in the curriculum notebook and correlated to specific lessons. The textual Job Aids, such as check lists are presented in two-color format and some are laminated for repeated use and long-term durability. The idea is that users would frequently withdraw the Job Aids from the notebook, use them in the office or in the field, and return them to the notebook for storage until the next application. Following is a list of Job Aids provided in the curriculum notebook:

- **Job Aid for Wood-Frame Construction:** Inspection Checklist for Wood-Frame Shear Walls
- **Job Aids for Masonry Construction:** (1) Designer Checklist for Masonry Construction; (2) Inspection Checklist for Masonry Construction
- **Job Aid for Concrete Construction:** Class B Lap Splice Table
- **Job Aids for Nonstructural Components:** (1) Standard Detail for Bracing of Suspended Ceilings and Standard Detail for Bracing Interior Non-Load-Bearing Partitions, with supporting documentation conforming to the 1997 *Uniform Building Code;* (2) Roles and Responsibilities Coordination Matrix for Nonstructural Building Component Seismic Anchorage or Bracing

2. Workshop on Roles and Responsibilities

The purpose of the 1-day Workshop on Roles and Responsibilities of Design and Code Enforcement Professionals, conducted on January 20, 1999 in Oakland, California, was to provide a forum where each of the project's three primary audiences (architects, engineers and code enforcers) could interact and discuss ways to improve the quality of seismic design, inspection and construction of new buildings and the retrofit of existing buildings. The Workshop was attended by 24 invited participants, with a reasonably equal representation from the following disciplines: architects, building officials and inspectors, contractors, and structural engineers. Prior to the Workshop the organizers commissioned a set of three position papers, or viewpoint papers, one each by an architect, a structural engineer, and a building official, to define specific issues and recommend potential solutions. These position papers were then presented verbally at the Workshop and served as a starting point to stimulate discussion by the Workshop participants. The one-day Workshop was also structured to include ample time for discussion of the issues identified in the position papers, to identify additional issues, and to resolve to the extent possible those issues considered of highest priority by the Workshop participants.

The findings of the Workshop are summarized in Briefing Paper 2 and are documented in the Workshop Proceedings (ATC/SEAOC, 1999). One of the major findings of the Workshop was the recommendation to prepare a Roles and Responsibilities Coordination Matrix for Nonstructural Building Component Seismic Anchorage or Bracing. This matrix was prepared as part of the ATC/SEAOC Joint Venture project and is included in the curriculum notebook as a Job Aid.

3. Training Seminars

The continuing education program developed under this project is intended as a long-term effort that will be implemented for years to come. The primary mechanism for disseminating information developed during the project is a series of "Continuing Education Training Seminars on Improving the Quality of Seismic Design and Construction." These seminars are being planned by the ATC/SEAOC Joint Venture and will be conducted throughout California on a periodic basis. In some instances, the seminar programs will be designed for all three intended audiences for the project (building officials, architects, and engineers), whereas in other instances the seminar program will be tailored to a specific audience. A registration fee to cover the cost of seminar handouts (curriculum notebook), speaker fees and travel, registration, meeting room, a/v equipment, and refreshments (approximately $125 in 1999 dollars) will be charged to each participant. Net proceeds from the seminars will be deposited in a restricted fund maintained by the ATC/SEAOC Joint Venture to be used to update the contents of the curriculum notebook as new information and techniques become available.

The first two training seminars were conducted on June 17, 1999, in Concord (San Francisco Bay area), and June 21, 1999, in the City of Commerce (Los Angeles area). The announced purpose of each 1-day seminar (the same seminar was given in both locations) was to provide practical guidance for improving the quality of seismic design, inspection, and retrofit of buildings. The first two seminars were considered as pilot efforts. The program consisted of three concurrent sessions, one each for architects, engineers, and building department personnel. In each session, participants were introduced to the training curriculum, including the Briefing Papers and Job Aids. The lectures were presented by speakers selected for their knowledge of the subject and their ability to present the training curriculum in a clear, concise, and exciting way. Building systems and components addressed included: wood-frame buildings, concrete and masonry buildings, and nonstructural components. The seminar also addressed the roles and responsibilities of architects, engineers, and building officials in ensuring quality seismic design and installation of nonstructural components. The Joint Venture also videotaped the seminar sessions held in the City of Commerce. The tapes have been archived at the Seismic Safety Commission headquarters in Sacramento, California, and at the ATC/SEAOC Joint Venture office in Redwood City, California.

4. Reference

ATC/SEAOC, 1999, *Proceedings, Workshop on Roles and Responsibilities of Design and Code Enforcement Professionals*, ATC/SEAOC Joint Venture, a Partnership of the Applied Technology Council and the Structural Engineers Association of California, Redwood City, California.

Briefing Paper 1

Building Safety and Earthquakes

Part A: Earthquake Shaking and Building Response

Introduction

This Briefing Paper 1, *Building Safety and Earthquakes,* consists of four parts describing earthquakes and their effects on buildings. Part A provides an overview of how earthquakes occur and the ground shaking motion they produce. It also explains why different individual buildings respond differently to the same ground motion. Parts B to D build on that information to explain how earthquake motion creates forces acting on a building, to describe the structural systems used to resist earthquakes, and to define the "load paths" of earthquake forces within buildings.

Severely damaging earthquakes have repeatedly demonstrated the importance of improving the quality of both earthquake design and construction. The objective of Briefing Paper 1 (Parts A to D) is to inform the stakeholders and participants in the design and construction process, including building inspectors and owners, about the basic principles of earthquake-resistant building design.

Earthquake Causes and Effects

Most earthquakes are caused by rock movement along rupturing faults located in the earth's crust. On a global scale, the earth's crust is divided into separate sections known as plates, as shown in Figure 1. Major faults are typically located at plate boundaries. In California, many lesser faults occur near the boundary of the Pacific and the North American plates, which, in California, is defined by the San Andreas fault. However,

There are more than 160 known active faults located in California.

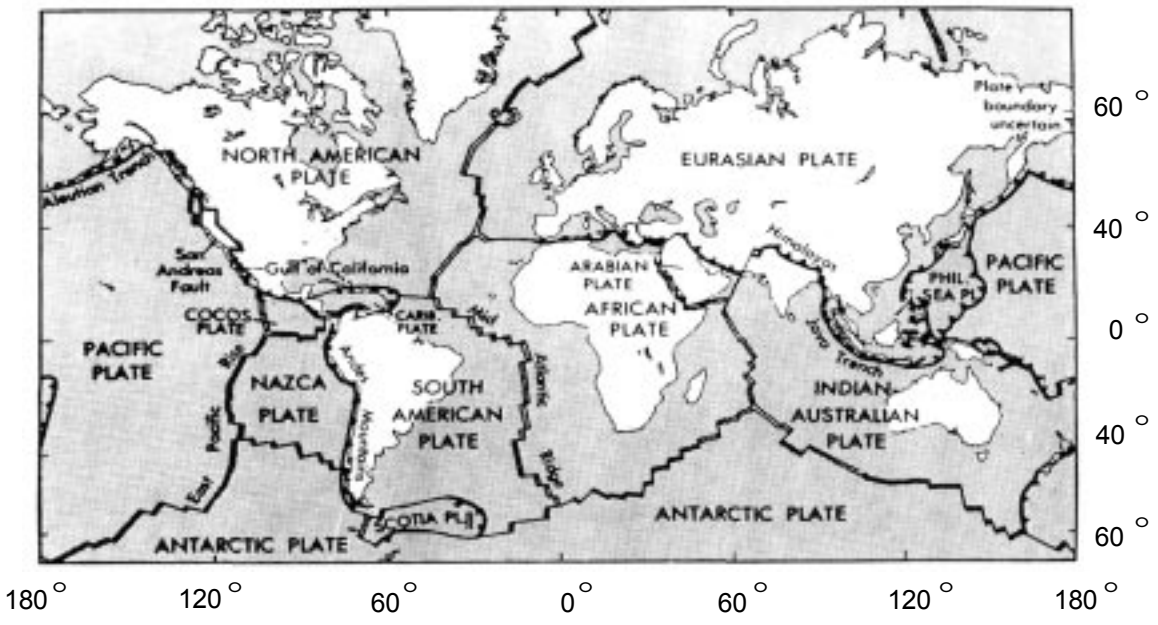

Figure 1. Global plates and plate boundaries.

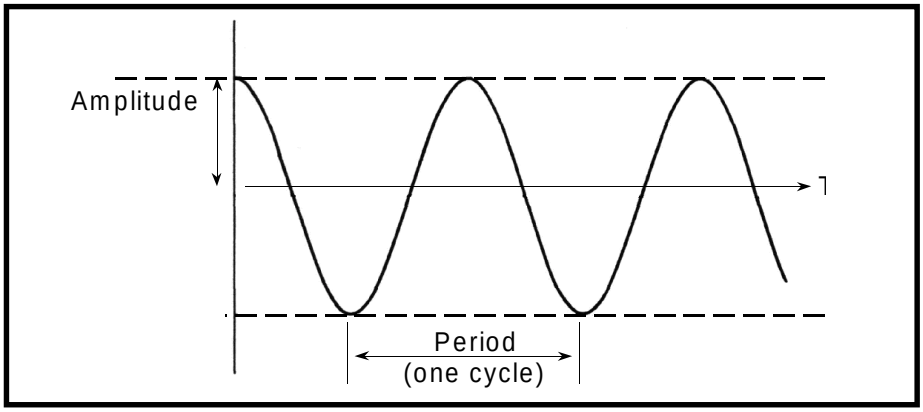

Figure 2. Cyclic wave of constant amplitude and period.

other parts of California also contain faults. In fact, there are more than 160 known active faults located in this state. New faults continue to be discovered, usually when an unexpected earthquake occurs. Essentially, earthquakes can affect any location within California, potentially causing significant damage and loss of life.

Faults move or "slip" when shear stresses deep underground exceed the ability of the compressed faulted rock to resist those stresses. Fault slip can move the nearest ground surface vertically, laterally, or in some combination. When this slip occurs suddenly, it causes seismic shock waves to travel through the ground, similar to the effect seen when tossing a pebble onto the surface of still water. These seismic waves cause the ground shaking that is felt during an earthquake.

A magnitude 7.0 earthquake releases 31.5 times more energy than does a magnitude 6.0 earthquake.

Ground motion contains a mix of seismic waves having two primary characteristics as shown in Figure 2. One is the wave amplitude, which is a measure of the size of the wave. The other is its period, which is a measurement of the time interval between the arrival of successive peaks or valleys, known as one cycle. This concept of a time measurement can also be expressed as frequency = 1/period, the number of cycles occurring per second.

Everything in the path of a seismic wave will be shaken. However, the amount of ground motion at any given location depends on three primary factors. One factor is the distance between the site and the source location of the earthquake, known as the focus or hypocenter, which in California may range from 2 to 15 miles underground. The shallower the focus, the stronger the waves will be when they reach the surface. As a general rule, the intensity (severity) of ground shaking diminishes with increasing distance from the source. Buildings located less than 15 kilometers (9.3 miles) from certain types of faults are required by the 1997 *Uniform Building Code* (UBC) to be designed to withstand the stronger shaking expected in these near-source zones. Maps produced by the California Division of Mines and Geology and available from the International Conference of Building Officials (ICBO) indicate where these faults are located.

The second factor is the total energy released from the earthquake, measured by its magnitude. Because the magnitude scale is logarithmic, a magnitude 7.0 earthquake releases 31.5 times more energy than does a magnitude 6.0 earthquake. The ground shaking intensity at a given location is greater for the magnitude 7.0 earthquake, but not 31.5 times greater. Instead, the larger energy release produces shaking that

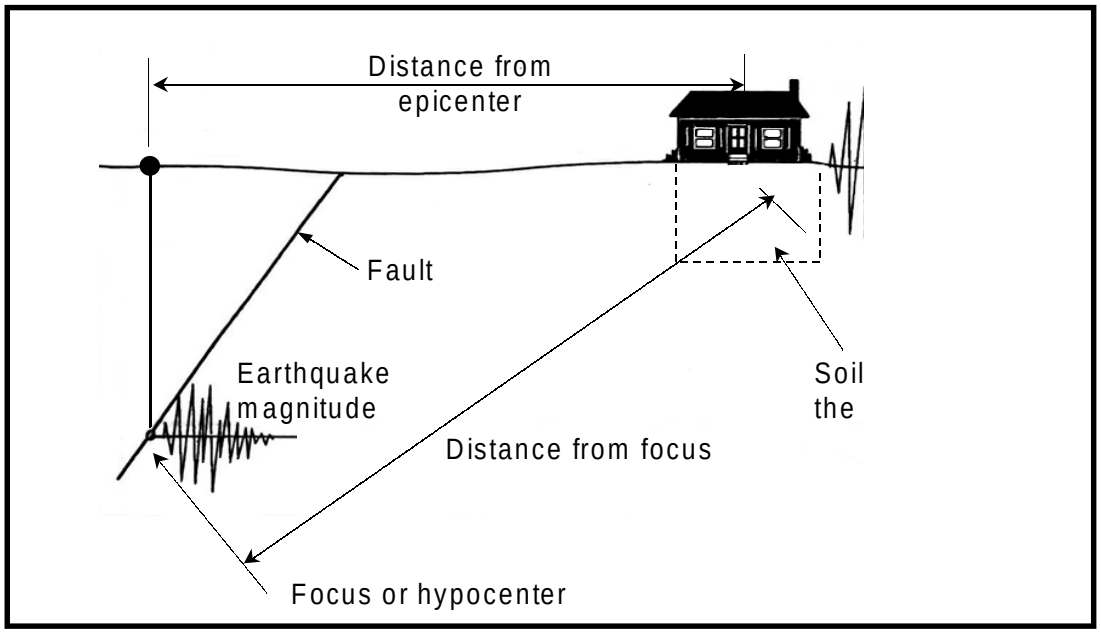

Figure 3. Common terms and factors affecting shaking intensity at a given site.

is felt over larger distances because the ruptured fault length is greater. Also, the shaking from a larger-magnitude earthquake often lasts longer, because more time is needed for the longer rupture to release the greater energy.

The last of the three primary factors is the nature of the soil or rock at the site. Generally, sites with deep soft soils or loosely compacted fill will be more strongly shaken than sites with stiff soils, soft rock, or hard rock. For example, during the 1989 Loma Prieta earthquake, the shaking experienced in the San Francisco Marina District, which is underlain by mud nearly 100 feet thick, was from three to four times stronger than the shaking measured only a few blocks away on bedrock, near the Golden Gate Bridge. The building codes for new construction (e.g., the 1997 UBC) and the *NEHRP Guidelines for the Seismic Rehabilitation of Buildings* (FEMA-273 report) use adjustment factors to account for the stronger shaking at soft soil sites and fill sites.

To summarize: the intensity of ground motion at a specific site, caused by a specific earthquake, depends primarily on three factors: the distance between the source (also known as focus or hypocenter) and the site, the magnitude of the earthquake (amount of energy released), and the type of soil or rock at the site. These factors are illustrated in Figure 3, which also shows the location of the epicenter (point on ground surface directly above the hypocenter). More complex factors, such as the type of faulting action, the direction of propagation of the fault rupture, and the frequency range of the waves, can increase or decrease the severity (intensity) of the local shaking. Consequently, actual ground motion cannot be precisely predicted. However, based on the recorded motions of past earthquakes obtained from instruments located both inside and outside buildings, it is possible to estimate the probable maximum ground motion given the values for the three factors. These estimates form the basis for seismic design requirements contained in modern building codes.

Building Response Characteristics

Different individual buildings shaken by the same earthquake respond differently. The effects of earthquake ground shaking depend on the specific response characteristics of the type of structural system used. One important

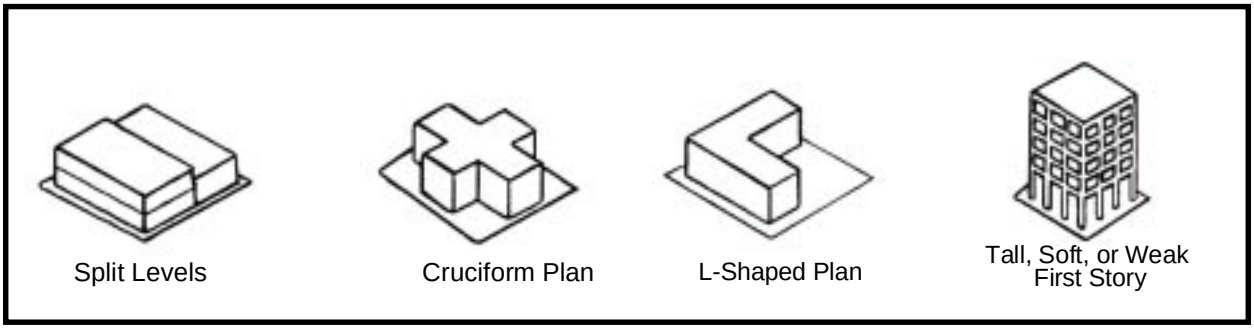

Figure 4. Examples of buildings with irregular configurations.

building characteristic is the fundamental period of vibration of the building (measured in seconds). The fundamental period of a building depends in a complex way on the stiffness of the structural system, its mass, and its total height. Seismic waves with periods similar to that of the building will cause resonance, and amplify the intensity of earthquake forces the building must resist.

Structural systems using concrete or masonry shear walls are stiff and result in buildings with short periods, whereas more flexible moment-frame systems have longer periods. In general, a large portion of the earthquake energy is contained in short-period waves. Therefore, short-period buildings with stiff structural systems are designed for larger forces than long-period, flexible, buildings. This concept is also applicable to the amount of force individual structural seismic elements and their components must resist. Stiff elements must be made stronger because they will attempt to resist larger earthquake forces than flexible elements in the same structural system.

Shape or configuration is another important characteristic that affects building response. Earthquake shaking of a simple rectangular building results in a fairly uniform distribution of the forces throughout the building. In a more complex T- or L-shaped building, forces concentrate at the inside corners created by those shapes. Similar problems arise when a building has floor or roof levels of adjacent portions offset vertically (split levels), or when the first story is taller or "softer" than the other stories. Irregularly shaped buildings, shown in Figure 4, are subject to special design rules because otherwise they can suffer greater damage than regularly shaped buildings.

References

ATC, 1997, *NEHRP Guidelines for the Seismic Rehabilitation of Buildings*, prepared by the Applied Technology Council for the Building Seismic Safety Council, published by the Federal Emergency Management Agency, FEMA 273 Report, Washington, DC.

ICBO, 1997, *Uniform Building Code*, International Conference of Building Officials, Whittier, California.

About this Briefing Paper Series

Briefing papers in this series are concise, easy-to-read summary overviews of important issues and topics that facilitate the improvement of earthquake-resistant building design and construction quality.

This briefing paper was prepared by the ATC/SEAOC Joint Venture, a partnership of the Applied Technology Council (ATC) and the Structural Engineers Association of California (SEAOC). Funding for the series was provided by the California Seismic Safety Commission, Proposition 122 Retrofit Practices Improvement Program.

Copies of Briefing Papers can be downloaded from ATC's World Wide Web site (www.atcouncil.org), or are available from:

ATC/SEAOC Joint Venture
c/o Applied Technology Council
555 Twin Dolphin Drive, Suite 550
Redwood City, California 94065

Briefing Paper 1

Building Safety and Earthquakes

Part B: Earthquake Forces in Buildings

Introduction

This Briefing Paper 1, *Building Safety and Earthquakes*, consists of four parts describing earthquakes and their effects on buildings. Part A describes the causes of earthquakes and resulting ground motions. This Part B describes how earthquake ground motions create various forces acting on a building and explains how those forces result in building drift. Parts C and D discuss structural systems that resist earthquakes and the "load path" of earthquake forces within buildings.

Earthquake forces are called lateral forces because their predominant effect is to apply horizontal loads to a building.

Forces and Accelerations

Designing buildings to resist earthquakes requires that ground motions be translated into forces acting upon a building. Earthquake forces are called lateral forces because their predominant effect is to apply horizontal loads to a building. Although earthquake waves do impart a vertical component of force to buildings, the weight of the building normally provides sufficient resistance. Therefore, vertical earthquake forces are usually only accounted for in special cases.

The general method for determining the total lateral earthquake force to be applied to a building is based on a simple equation, $F = ma$. It relates the force (F) to the mass (m) of the building and to the horizontal acceleration (a), imparted from the ground shaking. The building mass consists of the sum of the weights of all its structural and nonstructural components. The acceleration is expressed as a fraction of the acceleration due to gravity, commonly called "g."

We all experience the force associated with 1.0 g of constant vertical acceleration everyday due to the earth's gravity. The presence of this force, and hence the gravitational acceleration, is noticeable when we perform work that requires lifting, such as climbing stairs or moving objects from a lower to a higher level. The physical exertion involved in these activities is in response to the force that must be overcome, which we can call the resisting force. The resisting force is equal to the mass of the object times the acceleration due to gravity. Because gravity is constant, one must overcome a greater resisting force to move heavier objects. This concept of objects resisting movement, actually in any direction, derives from the object's "inertia."

We all experience inertia in response to the horizontal acceleration that occurs while traveling in a vehicle. When quickly accelerating from rest, the inertia of a person's body resists moving forward, and there is pressure from the seat back. During braking, the resisting force can be felt as the pressure from a seat belt. Figure 1

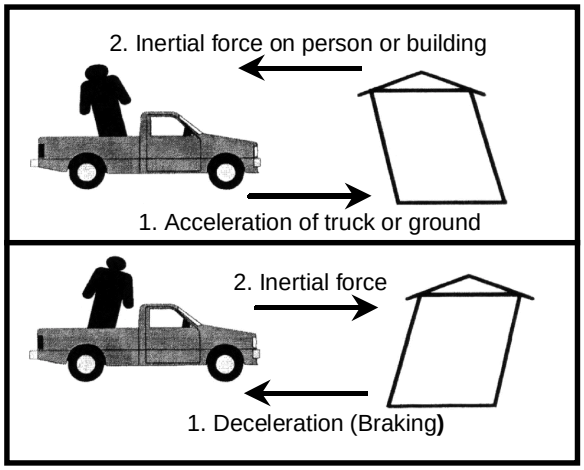

Figure 1. Inertial forces are a reaction to acceleration.

illustrates this familiar experience and relates it to the effect of building inertia during an earthquake.

In-Plane and Out-of-Plane Forces

Regularly shaped buildings and many irregular buildings have their structural elements oriented in two perpendicular directions. These directions are known as the primary orthogonal axes. When designing for earthquakes, lateral forces are assumed to be split into their orthogonal components, and to act parallel to each of these directions. This assumption is made because there is no specific orientation of the seismic waves that will pass through a building site. Furthermore, once a building begins to shake, the internal forces that are generated will be transmitted in components aligned along the primary orthogonal axes.

Earthquakes produce both in-plane and out-of-plane forces.

A force acting along one axis of a building causes resisting forces in walls or frames parallel to that direction. These are called in-plane forces, because the direction of force is parallel to the plane of the wall or frame. Forces that are perpendicular to this direction are known as out-of-plane forces. Earthquakes produce both in-plane and out-of-plane forces, as shown in Figure 2.

For example, in-plane forces acting on a plywood-sheathed wood-frame wall are resisted by the nails attaching the sheathing to the top plate, studs, and sill, and by the anchor bolts attaching the wall sill plate to the foundation. The out-of-plane forces acting on this same wall are resisted by nailed connections between the top plate of the wall and the adjacent floor or roof framing and at the bottom by anchor bolts in the sill plate. Most building seismic elements are not designed to resist forces from both these directions simultaneously. However, the forces in each direction must be separately accounted for, and structural elements must be provided with adequate capacity to resist forces acting in both in-plane and out-of-plane directions.

The Concept of Base Shear

The resisting force or inertia depends on the mass of an object, and the design of buildings must take this into account. Just as columns at the lower-story levels of a building must support the combined weight of the levels of the structure above them, lateral resisting forces also accumulate at lower levels. At the roof level, the inertia is based on the weight of the roof and the weight of one-half of the story height of the walls immediately below the roof. At the floor immediately below the roof, the inertia is based on the tributary weight of the floor and the walls halfway above and halfway below that floor. Figure 3 illustrates how the inertia at each level is calculated. The total resisting force increases at progressively lower levels, culminating at the

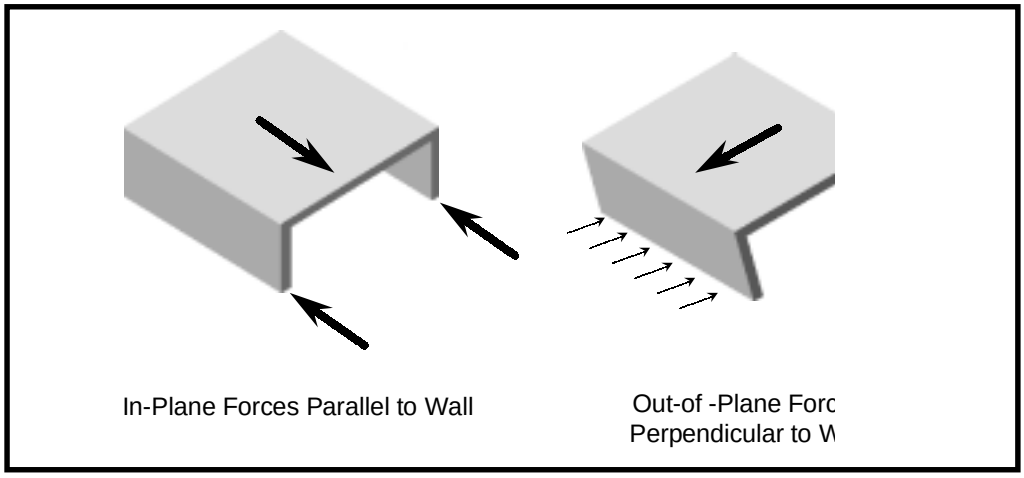

Figure 2. In-plane and out-of-plane forces on a shear wall.

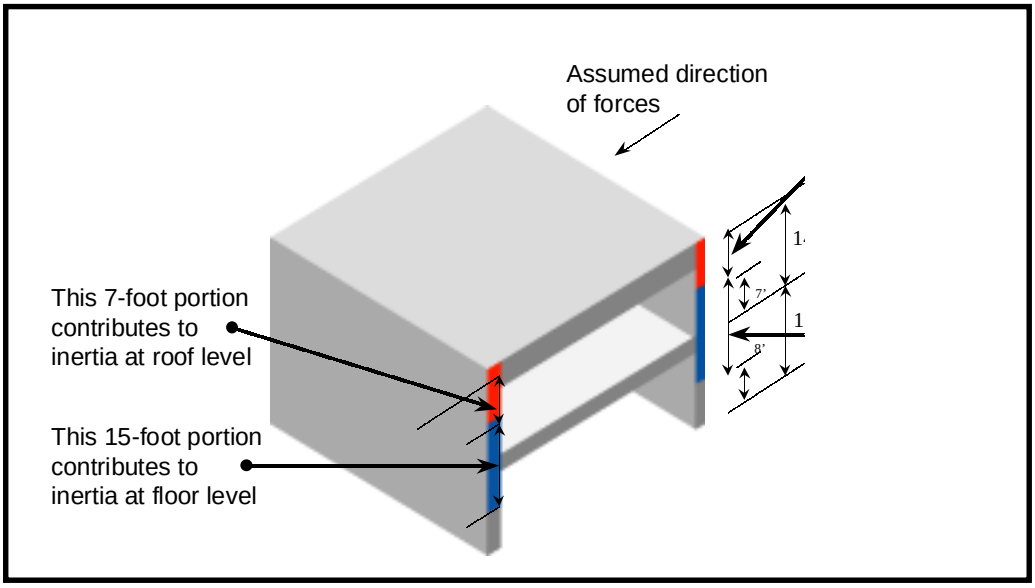

Figure 3. Calculating tributary forces at roof and second-floor levels.

foundation level. The resisting force at the foundation level is based on the sum of the contributing forces from each level and is known as the base shear.

Distributing Base Shear

In the design of a multi-story building, a portion of the total base shear is applied, as a horizontal force, at each floor level and at the roof. The design lateral force applied at each level is based on both the tributary mass at that level and the height of that level above the base of the building. The result is a seismic force distribution over the height of a building that is larger at the top than at the bottom and is described as a triangular shape. This distribution is a simplified approximation that generally matches the actual distribution of forces during earthquakes. The distribution is derived from calculations using recordings from strong motion instruments installed at various levels within buildings. When designing tall structures or very flexible structures with long natural periods, an extra lateral load is added at the roof level to account for additional stresses, from the "whiplash" effect that occurs at the roof level of a building.

Building Drift Caused by Lateral Forces

A horizontal force applied to an object tends to push it sideways. If it is unrestrained at its base, it slides in the direction of the applied force. With buildings, sliding is counteracted by the frictional sliding resistance between the bottom of the foundation and the soil and by the lateral bearing resistance of the soil against the vertical faces of the foundation and piles. Lateral forces acting above the foundation push the superstructure sideways until the resistance of the structure reaches an equilibrium with that force. The amount of horizontal displacement that occurs is called drift. Drift causes stress in structural seismic elements and nonstructural elements because it forces them into deformed shapes. Maximum drift usually occurs at the top of a building, but each story level is subjected to a certain amount of story drift as shown in Figure 4.

Maximum drift limits and individual story drift limits are specified in building codes to control the horizontal displacement a building experiences during an earthquake. Because drift and associated accelerations increase toward the top of a building, the 1997 UBC requires roof-mounted equipment to resist forces four times larger than equipment located on the ground

floor. The FEMA 273 N*EHRP Guidelines for the Seismic Rehabilitation of Buildings* have similar requirements. Building drift is also an important consideration when determining how closely two buildings can be spaced. Buildings must have adequate separation to avoid the damaging effects of pounding during earthquakes.

Drift considerations are particularly important for columns and for connections of heavy precast cladding components whose failure could lead to injuries or loss of life. All structural seismic elements and their connections must be designed to accommodate the expected drift, regardless of their role in resisting lateral forces. The collapse of a newly constructed parking garage at Cal State Northridge during the 1994 Northridge earthquake can be partly attributed to insufficient capacity in its interior concrete columns to accommodate the story drift.

Adherence to drift limits can also reduce economic losses, especially with respect to nonstructural components.

Some older buildings with drift-sensitive brittle finishes have been retrofitted using a technique known as seismic isolation. Seismic isolation typically uses viscous bearings or sliding friction bearings to support and isolate the building from horizontal earthquake ground motion similar to the way a car's suspension isolates it from vertical bumps in the road. Seismic isolation can reduce both seismic forces and drift-induced damage.

Buildings must have adequate separation to avoid the damaging effects of pounding during earthquakes.

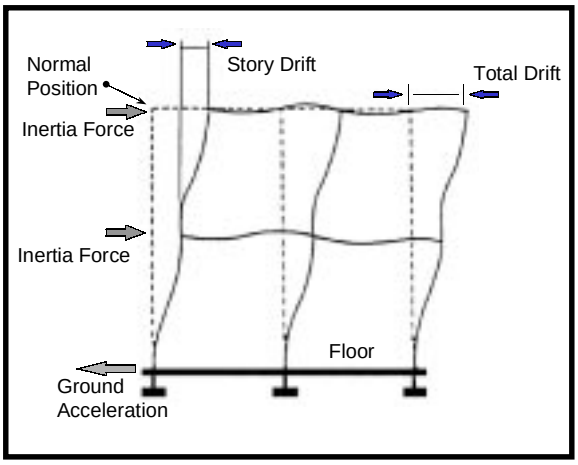

Figure 4. Drift in a building subjected to lateral earthquake forces.

References

ATC, 1997, *NEHRP Guidelines for the Seismic Rehabilitation of Buildings*, prepared by the Applied Technology Council for the Building Seismic Safety Council, published by the Federal Emergency Management Agency, FEMA 273 Report, Washington, DC.

ICBO, 1997, *Uniform Building Code*, International Conference of Building Officials, Whittier, California.

About this Briefing Paper Series

Briefing papers in this series are concise, easy-to-read summary overviews of important issues and topics that facilitate the improvement of earthquake-resistant building design and construction quality.

This briefing paper was prepared by the ATC/SEAOC Joint Venture, a partnership of the Applied Technology Council (ATC) and the Structural Engineers Association of California (SEAOC). Funding for the series was provided by the California Seismic Safety Commission, Proposition 122 Retrofit Practices Improvement Program.

Copies of Briefing Papers can be downloaded from ATC's World Wide Web site (www.atcouncil.org), or are available from:

ATC/SEAOC Joint Venture
c/o Applied Technology Council
555 Twin Dolphin Drive, Suite 550
Redwood City, California 94065

Briefing Paper 1

Building Safety and Earthquakes

Part C: Earthquake Resisting Systems

Introduction

This Briefing Paper 1, *Building Safety and Earthquakes*, consists of four parts describing earthquakes and their effects on buildings. Parts A and B describe the causes of earthquakes and resulting ground motions and explain how earthquake motions create various forces acting on a building. This Part C describes the types of structural systems and lateral-force-resisting elements used in buildings and how they can be used in combinations. Part D discusses the "load path" of earthquake forces within buildings.

Structural Systems Defined

The *Uniform Building Code* (UBC) earthquake provisions define three basic types of building structural systems: bearing wall systems, building frame systems, and moment-resisting frame systems.

Bearing wall systems consist of vertical load-carrying walls located along exterior wall lines and at interior locations as necessary. Many of these bearing walls are also used to resist lateral forces and are then called shear walls. Bearing wall systems do not contain complete vertical-load-carrying space frames but may use some columns to support floor and roof vertical loads. This type of system is very common and includes wood-frame buildings, concrete tilt-up buildings and masonry wall buildings.

Building frame systems use a complete three-dimensional space frame to support vertical loads, but use either shear walls or braced frames to resist lateral forces. Examples of these include buildings with steel frames or concrete frames along the perimeter and at intervals throughout the interior supporting vertical loads from floors and roof. Building frame systems typically use steel braced frames or concrete or masonry shear walls to resist lateral forces. A building frame system with shear walls is shown in Figure 1(a).

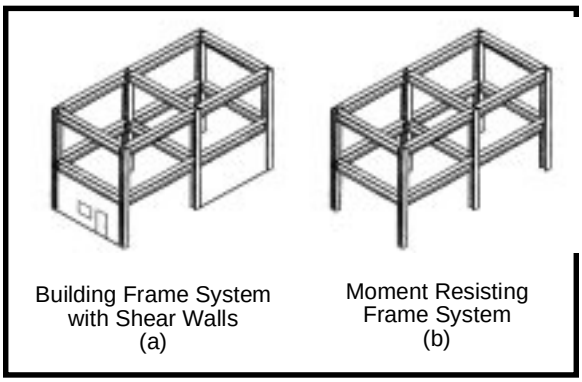

Figure 1. Building frame systems.

Moment-resisting frame systems can be steel, concrete, or masonry construction. They provide a complete space frame throughout the building to carry vertical loads, and they use some of those same frame elements to resist lateral forces. Shear walls (and braced frames) are not used in this system, as shown in Figure 1(b).

Occasionally buildings are defined as dual systems when they have a complete space frame that supports vertical loads and combine moment-resisting frames with either shear walls or braced frames to resist lateral loads.

Lateral-Force-Resisting Elements

Lateral-force-resisting elements must be provided in every structure to brace it against wind and seismic forces. The three principal types of resisting elements are shear walls, braced frames, and moment-resisting frames. Shear walls can be made of sheathed wood-frame walls, reinforced masonry, or reinforced concrete. Steel braced frames are often used in combination with concrete shear walls or masonry shear walls. Braced frames are essentially vertical, cantilevered trusses and may

be either concentric or eccentric in configuration. Concentric frames have diagonal braces located so that the lateral forces act along the direction of their longitudinal axis. Eccentric braced frames use both axial loading of braces and bending of sections of horizontal beams to resist the forces. Figure 2 shows typical braced frame configurations.

Moment-resisting frames can be constructed of steel, concrete, or masonry. Moment frames consist of beams and columns in which bending of these members provides the resistance to lateral forces. There are two primary types of moment frames, ordinary and special. Special moment-resisting frames are detailed to ensure ductile behavior of the beam-to-column joints and are normally used in zones of higher seismicity.

Because of damage observed following the 1994 Northridge earthquake, steel moment-resisting frames have been under intensive study and testing. The goal is to determine the causes of the damage and to recommend changes in steel moment-resisting frame design and construction to ensure ductile behavior of the joints. Additional information on that subject is available from the SAC Joint Venture. Contact the Applied Technology Council (see box).

The selection of the type of lateral-force-resisting elements to use in a building is often based on economics. A single type of resisting element is commonly used in most building types, such as in houses where wood-framed shear walls are used, or in concrete tilt-up buildings where concrete shear walls are used. However, other types of buildings may need to use combinations of more than one type of seismic element.

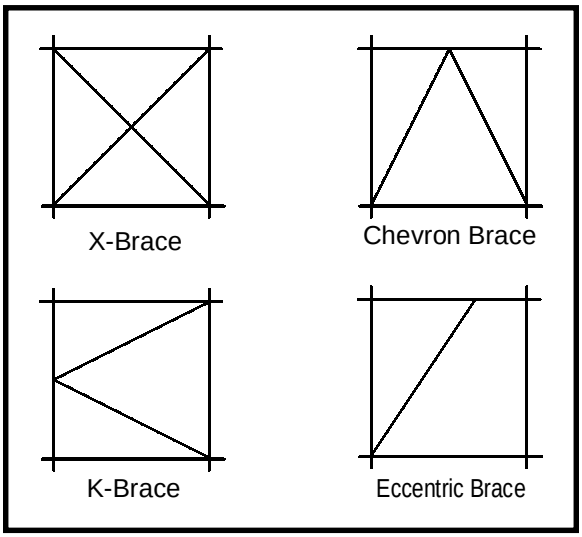

Figure 2. Types of braced frame elements.

The building code allows combinations to be used but they are also subject to very specific structural design rules. For example, if concrete shear walls that are also bearing walls are combined with braced frame elements along one axis and ordinary moment-resisting frames are used along the other axis, the braced frame elements need to be designed using slightly larger forces than if they were the only type of resisting element used along that axis. On the other axis, the moment-frame elements also need to be designed for forces larger than if they were the only type of resisting element in the building. These adjustments in design forces are required to account for the differences in strength, stiffness, and ductility among the three types of resisting elements when used in combination.

References

ICBO, 1997, *Uniform Building Code*, International Conference of Building Officials, Whittier, California.

About this Briefing Paper Series

Briefing papers in this series are concise, easy-to-read summary overviews of important issues and topics that facilitate the improvement of earthquake-resistant building design and construction quality.

This briefing paper was prepared by the ATC/SEAOC Joint Venture, a partnership of the Applied Technology Council (ATC) and the Structural Engineers Association of California (SEAOC). Funding for the series was provided by the California Seismic Safety Commission, Proposition 122 Retrofit Practices Improvement Program.

Copies of Briefing Papers can be downloaded from ATC's World Wide Web site (www.atcouncil.org), or are available from:

ATC/SEAOC Joint Venture
c/o Applied Technology Council
555 Twin Dolphin Drive, Suite 550
Redwood City, California 94065

Briefing Paper 1

Building Safety and Earthquakes

Part D: The Seismic Load Path

Introduction

This Briefing Paper 1, *Building Safety and Earthquakes*, consists of four parts describing earthquakes and their effects on buildings. Parts A and B describe the causes of earthquakes and resulting ground motions and explain how earthquake motions create various forces acting on a building. Part C describes typical structural systems and lateral-force-resisting elements used in buildings. This Part D defines the seismic load path elements, describes their functions and the necessary interconnections between them to resist earthquake forces. Also included in this part of Briefing Paper 1 are resources for additional reading on building safety and earthquakes.

Primary Load-Path Elements

Within every building, there are multiple elements that are used to transmit and resist lateral forces. These transmitting and resisting elements define the building's lateral-load path. This path extends from the uppermost roof or parapet, through each element and connection, to the foundation. Load-path elements vary in scale from massive multi-story moment-resisting frames to individual nails connecting wood members. An appreciation of the critical importance of a complete load path is essential for everyone involved in the design, construction, and inspection of buildings that must resist earthquakes.

There are two orientations of primary elements in the load path: those that are vertical, such as shear walls, braced frames, and moment frames, and those that are essentially horizontal, such as the roof, floors, and foundation. The roof and floor elements are known as diaphragms. Diaphragms serve primarily as force-transmitting or force-distributing elements that take horizontal forces from the stories at and above their level and deliver them to walls or frames in the story immediately below. Diaphragms are classified as either flexible or rigid, and the method of distributing earthquake forces from the diaphragm to the resisting elements depends on that classification. Wood-framed diaphragms can be considered either flexible or rigid and concrete diaphragms are considered rigid.

Shear walls and frames are primarily lateral-force-resisting elements but can also perform force-transmitting functions. For example and while not necessarily desirable, an upper-story interior shear wall may not continue to the base of the building and therefore must transmit its forces to a floor diaphragm. Also, at the base of a frame or a shear wall, forces are transmitted into a foundation element. The primary structural elements that participate in the earthquake load path are shown in Figure 1.

Foundations form the final link in the load path by collecting the base shear and transmitting it to the ground. Foundations resist lateral forces through a combination of frictional resistance along their lower surface and lateral bearing against the depth of soil in which they are embedded. Foundations must also support additional vertical loads caused by the overturning forces from shear walls and frame columns.

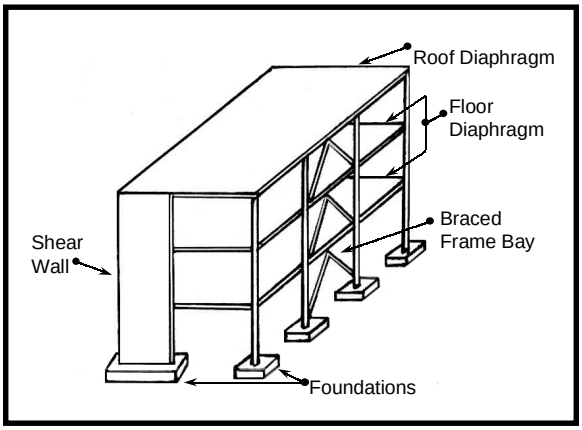

Figure 1. Primary structural load path elements.

Secondary Load-Path Elements

Within the primary load-path elements, there are individual secondary elements needed to resist specific forces or to provide specific pathways along which lateral forces are transmitted. Particular attention must be given to transmitting forces between horizontal seismic elements (diaphragms) and vertical seismic elements. Two important secondary elements are chords and collectors. A chord is a structural member along the boundary of a diaphragm that resists tension and compression forces. A collector is a structural member that transmits diaphragm forces into shear walls or frames. Figure 2 depicts the overall function of chords and collectors.

In the case of floors and roofs, the perimeter edges or boundaries are critical locations because they form the interface between the diaphragms and the perimeter walls. The perimeter is typically the location for vertical seismic elements, although many buildings also have shear walls or frames at interior locations. An interior line of resistance also creates a diaphragm boundary. Boundary elements in diaphragms usually serve as both chords and collectors, depending on the axis along which lateral loads are considered to be applied.

As shown in Figure 2, the forces acting perpendicular to the boundary elements tend to bend the diaphragm, and the chord member must resist the associated tension and compression. Similar to a uniformly loaded beam, a diaphragm experiences the greatest bending stress and largest deflection at or near the center of its span between vertical resisting seismic elements. The chord on the side of the diaphragm along which the forces are being applied is in compression, and the chord on the opposite side is in tension. These tension and compression forces reverse when the earthquake forces reverse. Therefore, each chord must be designed for both tension and compression.

Walls that structurally support diaphragm edges must also resist out-of-plane forces caused by diaphragm bending. In wood-frame walls, the double top plates usually act as chords for the diaphragm at that level. In concrete and masonry walls, reinforcing steel is placed at the diaphragm level to resist the out-of-plane bending in the wall.

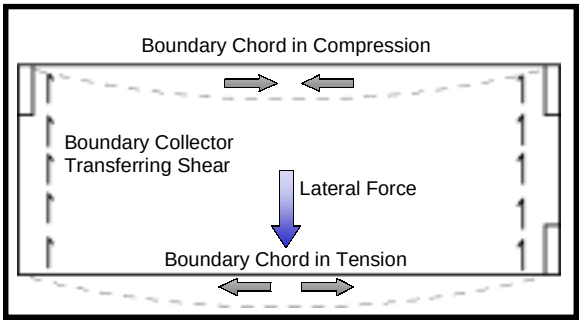

Figure 2. Function of diaphragm chords and collectors.

Collectors are needed when an individual shear wall or frame in the story immediately below the diaphragm is not continuous along the diaphragm boundary (See Figure 3). This is a very common situation because shear walls are often interrupted by openings for windows and doors, and because resisting frames are normally located in only a few of the frame bays along a diaphragm boundary. A path must be provided to collect the lateral forces from portions of a diaphragm located between vertical resisting seismic elements and to deliver those forces to each individual shear wall or frame. The collector member provides that path. Collectors are commonly called drag struts or ties. Collectors are also needed when an interior shear wall or frame is provided (see Figure 3). In this case, the collector is placed in the diaphragm, aligned with the wall or frame, and extends to the diaphragm edges beyond each end of the wall or frame. Collectors can occur in wood-framed walls using headers and top plates to transfer the forces and can occur in spandrel beams, of concrete or masonry construction, that link sections of shear walls together.

Connections

The following statements contained in the 1997 UBC clearly require that a complete load path be provided throughout a building to resist lateral forces.

> "All parts of a structure shall be interconnected and connections shall be capable of transmitting the seismic force induced by the parts being connected."

> "Any system or method of construction shall be based on a rational analysis... Such

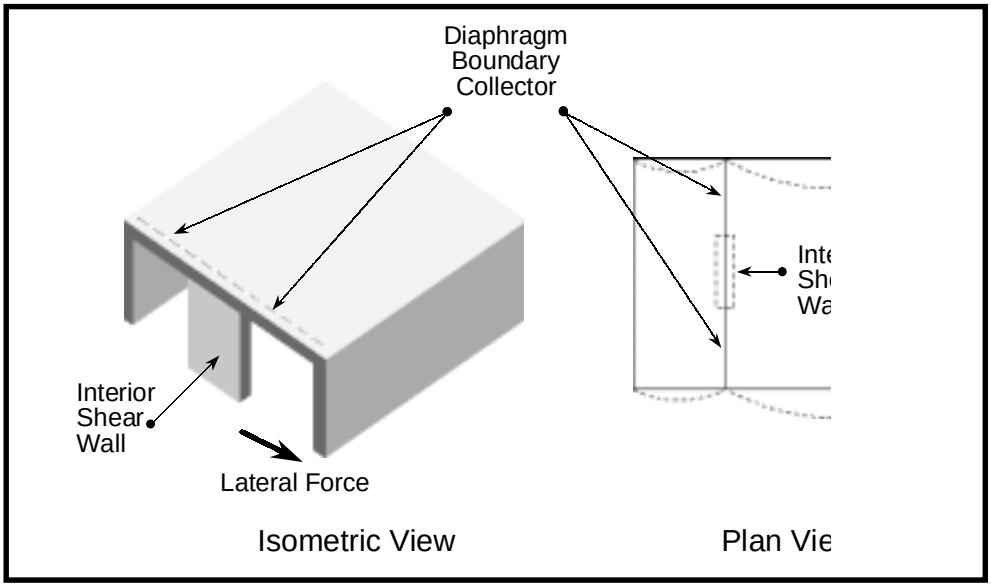

Figure 3. Use of collector element at interior shear wall.

> analysis shall result in a system that provides a complete load path capable of transferring all loads and forces from their point of origin to the load-resisting elements."

To fulfill these requirements, connections must be provided between every element in the load path. When a building is shaken by an earthquake, every connection in the lateral-force load path is tested. If one or more connections fail because they were not properly designed or constructed, those remaining in parallel paths receive additional force, which may cause them to become overstressed and to fail. If this progression of individual connection failures continues, it can result in the failure of a complete resisting seismic element and, potentially, the entire lateral-force-resisting system. Consequently, connections are essential for providing adequate resistance to earthquakes and must be given special attention by both designers and inspectors.

When a building is shaken by an earthquake, every connection in the lateral-force load path is tested.

Connections are details of construction that perform the work of force transfer between the individual primary and secondary structural elements discussed above. They include a vast array of materials, products, and methods of construction. For example, forces are resisted in wood-framed diaphragms by the action of nails or other fasteners used to attach structural sheathing to the joists, trusses, beams, ledgers, and blocking that make up the diaphragm framing. Nails, bolts, and prefabricated metal connectors are used for diaphragm chord and collector splices of wood members. In steel construction, metal deck diaphragms use welds to resist diaphragm forces and chord and collector beams are connected by bolts, welds, or a combination of both. In concrete construction, diaphragm reinforcing steel resists forces in the diaphragm and chord tension stresses, and reinforcing dowels are generally used to transfer forces from the diaphragm boundaries to concrete walls or frames.

Connection capacity is determined by performing a detailed analysis of the individual forces the connection must transfer. The capacity actually provided, however, is highly dependent on the implementation of the specific details of its construction. Therefore, two specimens of the same connection can have significantly different capacities, even when the differences in construction are imperceptible. Some common examples can illustrate this point. The capacity of a 3/16" fillet weld is 25 percent

less than that of an equal length of 1/4" fillet weld; the capacity of an 18-gauge strap to resist tensile forces is 36 percent less than for a 14-gauge strap of equal width; the shear capacity of a 1/2"-diameter foundation bolt in a 2×4 wood sill is 33 percent less than that of a 5/8"-diameter bolt; and the shear capacity in wood of an 8d box nail is 22 percent less than that of an 8d common nail.

Construction tolerances play an equal role in determining the actual capacities of connections. Parameters such as minimum edge and end distances, required embedment or penetration depths, round versus slotted holes for bolts, spacing of reinforcing ties in concrete, and misalignment of parts causing eccentric loads, can all significantly reduce connection capacity. Careful design and detailing on the drawings and thorough inspection of every connection in the load path is necessary to avoid creating weak links that lead to excessive earthquake damage.

References

ICBO, 1997, *Uniform Building Code*, International Conference of Building Officials, Whittier, California.

Resources for Additional Reading

Algermissen, S.T., 1983, *An Introduction to the Seismicity of the United States*, Earthquake Engineering Research Institute, Oakland, California.

ATC, 1997, *NEHRP Guidelines for the Seismic Rehabilitation of Buildings*, prepared by the Applied Technology Council for the Building Seismic Safety Council, published by the Federal Emergency Management Agency, FEMA 273 Report, Washington, D.C.

Dames & Moore Inc., 1988, *How Earthquakes Affect Buildings - A Video, Final Cut Video*, Dames & Moore, Inc., Walnut Creek, California.

FEMA, 1998, *Seismic Retrofit Training for Inspectors and Contractors*, FEMA Emergency Management Institute, Emmitsburg, Maryland.

SAC, 1995, *Interim Guidelines: Evaluation, Repair, Modification, and Design of Welded Steel Moment-Frame Structures*, prepared by the SAC Joint Venture (Report SAC-95-02), published by the Federal Emergency Management Agency, FEMA 267 Report, Washington, D.C. (Other SAC publications are available through the Applied Technology Council; see box.)

Stratta, J.L., 1987, *Manual of Seismic Design*, Prentice Hall, Englewood Cliffs, New Jersey.

Yanev, P., 1974, *Peace of Mind in Earthquake Country*, Chronicle Books, San Francisco, California.

About this Briefing Paper Series

Briefing papers in this series are concise, easy-to-read summary overviews of important issues and topics that facilitate the improvement of earthquake-resistant building design and construction quality.

This briefing paper was prepared by the ATC/SEAOC Joint Venture, a partnership of the Applied Technology Council (ATC) and the Structural Engineers Association of California (SEAOC). Funding for the series was provided by the California Seismic Safety Commission, Proposition 122 Retrofit Practices Improvement Program.

Copies of Briefing Papers can be downloaded from ATC's World Wide Web site (www.atcouncil.org), or are available from:

ATC/SEAOC Joint Venture
c/o Applied Technology Council
555 Twin Dolphin Drive, Suite 550
Redwood City, California 94065

Briefing Paper 2

Roles and Responsibilities of Engineers, Architects, and Code Enforcement Officials

Part A: The Need for Improved Coordination

Introduction

This Briefing Paper 2, *Roles and Responsibilities of Engineers, Architects, and Code Enforcement Officials*, addresses the need for improved coordination in the seismic design and construction process. Divided into two parts, this Briefing Paper focuses primarily on issues relating to the seismic resistant design and installation of nonstructural components, an area where coordination has been particularly lacking. This Part A provides an overview of why this topic is essential for the reduction of earthquake losses. In particular, it discusses how roles and responsibilities are changing and how these changes can affect quality control and the seismic resistance of specific nonstructural components. Part B identifies the major issues raised at the 1999 ATC/SEAOC Joint Venture Workshop on Roles and Responsibilities, which is introduced in Part A, and provides recommendations to resolve three key issues identified at the workshop. The goal of Briefing Paper 2 is the improvement of overall construction quality, particularly the seismic performance of nonstructural components and complete nonstructural systems.

Engineers, architects, and code enforcement professionals have substantially different viewpoints about thier own roles and responsibilities, and the responsibilities of others, for ensuring adherence to seismic provisions in the design and construction process.

Workshop on Roles and Responsibilities

The impetus for holding the 1999 Workshop on Roles and Responsibilities originated from a review of responses to an eight-page survey sent by the ATC/SEAOC Joint Venture to ATC subscribers and to members of the California Council of the American Institute of Architects, California Building Officials, the Structural Engineers Association of California, and two organizations of special inspection and testing agencies in the San Francisco and Los Angeles areas. These groups are the target audience of the California Seismic Safety Commission's project on the continuing education of design and code enforcement professionals. It was apparent from the survey responses that these groups have substantially different viewpoints about their own roles and responsibilities, and the responsibilities of others, for ensuring adherence to seismic provisions in the design and construction process.

The 1999 workshop focused on the installation of nonstructural building components and systems that are typically not the direct responsibility of the architect or engineer of record. The workshop purpose was to explore how the division of roles and responsibilities among members of the design, code enforcement and construction elements of building projects affects the seismic performance of nonstructural building components. The workshop's 24 participants included architects, local and state agency building officials, plan-check engineers and inspectors, general and specialty contractors, and structural and mechanical design engineers.

The workshop also provided a forum for representatives of these various groups to discuss problem areas or impediments to construction quality and the provision of adequate seismic resistance in both new construction and retrofit projects. The goal was to define the principal problems, to recommend methods to solve them, and to make the workshop results available to all affected professions (through this briefing paper and by other means).

During the workshop it was noted that a significant portion of injuries, and often more than one-half of the total economic loss in earthquakes, stems from damage to nonstructural building components (Figures 1 and 2). Economic losses are rarely limited to the cost of repairing individual damaged components. Losses often include collateral damage to other related equipment and to building contents and the indirect costs associated with the time necessary to complete repairs. In fact, the costs associated with nonstructural component damage can be two to three times the cost of repairing structural damage caused by earthquakes. As a result, specific responsibility for the seismic performance of all building components and systems must be clearly established and understood by those designing their installation, and by those performing the actual installation and inspection. Please refer to Briefing Paper 5 (in this series), *Seismic Response of Nonstructural Building Components*, for a more detailed discussion of nonstructural component vulnerability and proper seismic restraint of these components.

Specific responsibility for the seismic performance of all building components and systems must be clearly established and understood by those designing their installation, and by those those performing the actual installation and inspection.

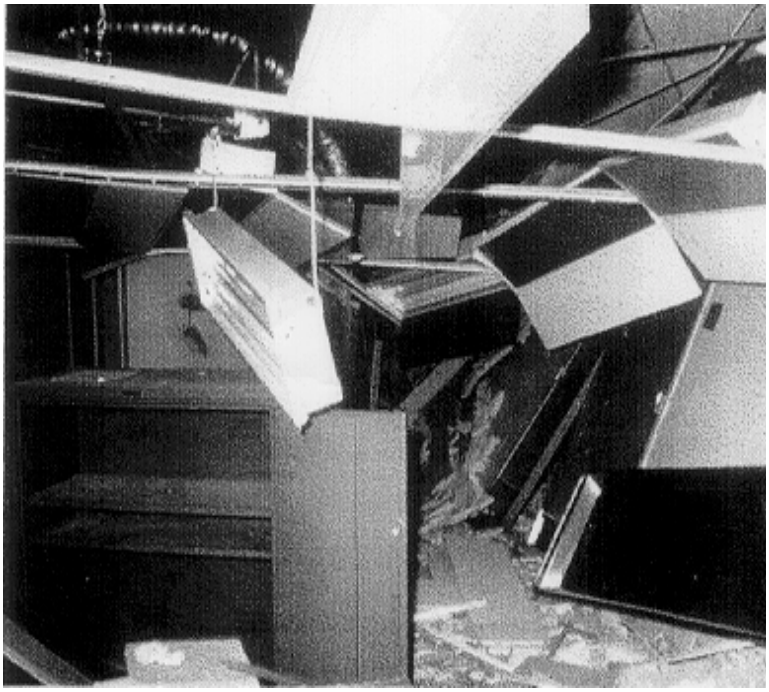

Figure 1. Earthquake Induced Partition Damage. Earthquake Engineering Research Institute photo.

Design-Build and Fast-Track Projects

The current prevalence of design-build and fast track project design and construction has increased both the complexity and the importance of coordination and communication among all of the entities involved. The organization of project teams, the financial accountability, and increasing owner involvement in choosing design consultants and contractors, are all changing traditional roles and responsibilities. At the same time, the nature and level of involvement or oversight by the primary designers with respect to nonstructural components appears to be diminishing. Specialty contractors are regularly delegated the design, fabrication, and installation responsibility for nonstructural components (e.g., window walls, cladding, veneers, fire protection systems) whose seismic performance is critical to both occupant safety and postearthquake functionality. These contractors and mechanical and electrical system design engineers may be given contractual responsibility for seismic performance of the components and systems they specify or install, but they may not have sufficient knowledge or experience to execute that responsibility without assistance from the structural engineer.

The architect has traditionally held the responsibility for the overall project coordination, including discussions with the client,

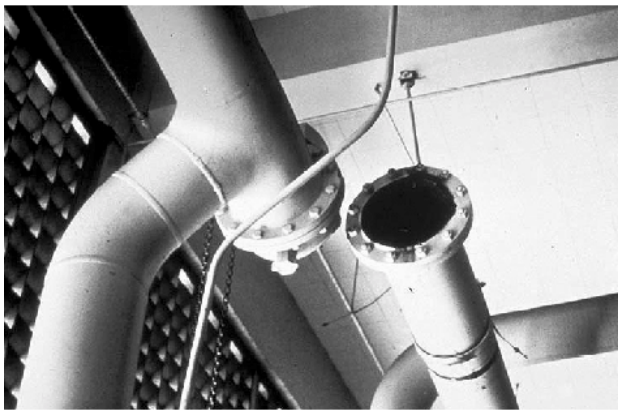

Figure 2. Earthquake-induced pipe damage. Earthquake Engineering Research Institute photo.

negotiating contracts with other design consultants and paying for their services, writing specifications for all elements of the construction, and dividing roles and responsibilities among members of the design team. With these financial and procedural arrangements, the architect had the ability to control the quality of the finished product. Design-build projects usually have different financial arrangements, in which the general contractor may hire some of the design consultants or the owner may desire to select consultants. In fact, the contractor may have principal control of certain design processes, role definition, schedule, and finances. Such arrangements significantly alter accountability, division of responsibilities, and lines of communication, placing the architect in a noticeably less dominant role without necessarily reducing the owner's perception of the architect's span of control. In some cases, the architect is obligated for reasons of liability to abdicate responsibilities under these arrangements. However, the result may be that no one takes responsibility for the necessary coordination. This situation increases the potential that the seismic performance of nonstructural building components will not be adequately addressed.

Almost all nonresidential projects are now considered "fast-track" with multiple subdivisions of a single building project into distinct submittal packages. The current trend goes far beyond the common practice of separating the building shell from the tenant improvements. While a fast-track process can speed a project's completion, it substantially complicates coordination because a complete design team is usually not established before drawings and documents are started. This arrangement can cause problems when decisions early in a project delegate responsibility to entities who are not yet under contract and who may not expect to be given that responsibility. Failure to involve subcontractors or design consultants early in a project's development can result in expensive revisions to previous design or fabrication work. Adequate communication among designers during fast-track projects is difficult to achieve because work needing coordination is often occurring in different time frames. The deferred submittals used to postpone detailed descriptions of some components or products until suppliers have been selected also create difficulties for building department plan-checking and inspection efforts.

Deferred Submittals

Most product delivery methods incorporate a commonly used process defined in the building code as a "deferred submittal." Typically, contract documents for the stairs, elevators, exterior cladding, window walls, and sometimes the entire mechanical or electrical systems serving tenant spaces, are not provided with the application for the building permit. The code does allow this to occur, and since its 1994 edition, the *Uniform Building Code* (UBC) has contained specific rules for the review of deferred submittal items. The UBC requires all deferred submittal items to be listed on the plans and that the architect or engineer of record review and accept all deferred submittal documents prior to forwarding them to the building department for review and approval. However, in practice, the design and fabrication or shop drawings for these items are not always thoroughly reviewed by the architect or engineer, and sometimes are never submitted to the building department. Assigning and completing the responsibility for the review of these items by both the building designer and the code enforcement officials is crucial for ensuring that these components can adequately withstand earthquake forces.

A common deferred responsibility is the seismic

anchorage of mechanical equipment to the building's structural framing. In a typical situation, the mechanical designers or contractors may expect the structural engineer to accommodate them with specifically designed parts of that anchorage. The structural engineer, on the other hand, may believe that this is outside the engineer's responsibility, because specific information to accomplish the task was not available during the structural design phase, or it was not included in the contract. When responsibility is not assigned to the consultant best able to address the issue, and no provision is made for a review of the anchorage by that individual, improper anchorage and resulting earthquake damage can occur. Building departments usually, but not always, require the submittal of design and construction documents for equipment anchorage. If the anchorage is designed by a person unfamiliar with seismic design principles and not reviewed at all, or only reviewed by someone who is likewise insufficiently knowledgeable, the equipment may be at great risk of earthquake damage. The substantial changes in the 1997 UBC for calculating nonstructural component seismic design forces and calculating the much larger anchorage forces that apply to roof-mounted equipment will undoubtedly increase the unintentional noncompliance with code requirements. Similar situations of inadequate design or design review also occur for other nonstructural components, even those that are not part of deferred submittals.

When responsibility is not assigned to the consultant best able to address the issue, and no provision is made for a review of the anchorage by that individual, improper anchorage and resulting earthquake damage can occur.

References

ICBO, 1997, *Uniform Building Code*, International Conference of Building Officials, Whttier, California.

About this Briefing Paper Series

Briefing papers in this series are concise, easy-to-read summary overviews of important issues and topics that facilitate the improvement of earthquake-resistant building design and construction quality.

This briefing paper was prepared by the ATC/SEAOC Joint Venture, a partnership of the Applied Technology Council (ATC) and the Structural Engineers Association of California (SEAOC). Funding for the series was provided by the California Seismic Safety Commission, Proposition 122 Retrofit Practices Improvement Program.

Copies of Briefing Papers can be downloaded from ATC's World Wide Web site (www.atcouncil.org), or are available from:

ATC/SEAOC Joint Venture
c/o Applied Technology Council
555 Twin Dolphin Drive, Suite 550
Redwood City, California 94065

Briefing Paper 2

Roles and Responsibilities of Engineers, Architects, and Code Enforcement Officials

Part B: Identification and Resolution of Major Issues

Introduction

This Briefing Paper 2, *Roles and Responsibilities of Engineers, Architects, and Code Enforcement Officials,* addresses the need for improved coordination in the seismic design and construction process, focusing in particular on nonstructural components. Part A provides an overview of why this topic is essential for the reduction of earthquake losses. In particular, it discusses how roles and responsibilities are changing and how these changes can affect quality control and the seismic resistance of specific nonstructural components. This Part B identifies the major issues raised at the 1999 ATC/SEAOC Joint Venture Workshop on Roles and Responsibilities (see Part A for additional information on the workshop) and provides recommendations to resolve three key issues identified at the workshop.

Issues Raised by the 1999 Roles and Responsibilities Workshop

As a starting point for the discussions at the 1999 Workshop on Roles and Responsibilities, six questions were asked.

1. Who should be responsible for ensuring that nonstructural components are properly installed to resist earthquakes?
2. How should the responsibility for nonstructural components be assigned — assigned by whom, and in what form?
3. What should be the responsibility of code enforcement professionals in ensuring the quality of construction of nonstructural components? What should their responsibility be for prescriptive installation standards such as those of the Sheet Metal and Air Conditioning Contractors National Association (SMACNA) for mechanical equipment ducts and piping, and those of the National Fire Protection Association (NFPA) for fire sprinklers?
4. What steps can be taken to enable design professionals to be properly compensated for design and for construction observation of nonstructural component installations?
5. How can attention to the quality of seismic resistant construction be increased among design and code enforcement professionals?
6. Is there a similar need to define (or redefine) the roles and irresponsibilities for improving the quality of seismic resistant construction of structural components?

During the workshop, additional issues were also identified, as described below.

A major issue from the design professional perspective is the virtual nonexistence of owner awareness and appreciation of the potential risks and consequences of earthquake damage to both structural and nonstructural components. A general contractor stated that owners are not motivated to be concerned about seismic safety. An unanswered, but important question is: What are the expectations of owners or the public regarding earthquake performance of structural and nonstructural components? Code enforcement officials suggested that designers need to be proactive and educate owners on the benefits of improving quality control. Designers felt that it is difficult to present those arguments without accurate information with which to compare the actual benefits and costs.

Code enforcement officials expressed the belief that public policy makers do not understand or appreciate seismic performance issues and therefore do not give them a high priority. If this is to change, elected officials need education on this subject in simple and very graphic terms. The economic loss consequences of nonstructural component damage, in particular, should be a concern for lenders and insurers, but they too may lack an awareness of the extent and gravity of the problem. Evaluation of earthquake risk and damage potential are often performed by investment trusts purchasing existing buildings. For

new construction, however, lenders and insurers apparently assume that the code and its current level of enforcement are entirely adequate. Establishing seismic considerations as a high priority among elected officials, insurers, lenders, owners and the general public appears to be essential in order to create a demand for better quality control for reducing earthquake damage.

Another major issue is that the budget allocated for quality control in most building projects is too small. It is generally believed that owners do not understand that the code is not always fully enforced and they consequently fail to realize that the protections they expect the code to provide, are, in many cases, not being achieved. As a result, requests by designers for fees to cover coordination and oversight of nonstructural component seismic design and installation are often rejected, and in reality, fees are simply not available in most projects. An exception to this occurs in the budgets of hospital and public school construction, because of the rigorous inspection and oversight requirements established and enforced by the state agencies responsible for this construction.

Designers believed that more rigorous code enforcement at the local level in all buildings and all occupancies would help justify the larger fees necessary to coordinate and observe adequately the installation of nonstructural components. Code enforcement representatives concurred that they, too, would need higher fees to provide more thorough inspection of nonstructural component installations. A designer suggested that if local building officials were to require structural observation for seismic anchorage and bracing of nonstructural components, the owner would be forced to allocate a sufficient budget for those services. However, building officials felt that guidelines for deciding when to require such observation would be needed. Obtaining adequate budgets for both code enforcement agencies and designers appears to be a significant issue for achieving adequate seismic performance of nonstructural components.

Some contractors felt that the code is unclear. Workers would do a better job if they received more education on proper installation methods. Coordination between individual trades is critical when attempting to provide adequate bracing or anchorage in tight spaces containing many systems.

A code official remarked that the level of detail provided in many mechanical, plumbing, and electrical schematic drawings is insufficient. An architect admitted that there are significant differences in drawing quality and thoroughness depending on the type of project and its budget, and that there does not appear to be any motivation to improve the quality for the smaller projects. Efforts to delay the production of construction documents or to raise their costs would likely meet strong resistance. Defining a minimum level of detail for installation of nonstructural components for all types of projects appears to be necessary, but the real question is what that level should be.

Three key issues, in the form of questions, evolved from a synthesis of the above cited issues and a vote of the participants (Table 1). Two of these issues evolved from the original questions and their discussion, while the third evolved from subsequent discussion.

Table 1.- Key Issues Identified at 1999 Roles and Responsibilities Workshop (in ranked order)

1. Who should be responsible for ensuring that nonstructural components are properly installed to resist earthquakes, and how should the responsibility for nonstructural components be assigned — assigned by whom, and in what form?
2. Should California building codes require on-site observation of nonstructural installation by design professionals? Who should be responsible for observing seismic bracing of nonstructural components? What level of design professional observation is appropriate?
3. How can clients be educated to care about seismic issues? Who should communicate seismic performance options (including observation) to clients?

Workshop Recommendations

Each of the three key issue questions (Table 1) are discussed separately in the order of priority established by a vote of the workshop participants.

Key Issue 1—Responsibility Assignment:

- Who should be responsible for ensuring that nonstructural components and systems are

properly installed to resist earthquakes?

- How should the responsibility for nonstructural components be assigned?
- Assigned by whom?
- In what form?

The answer to the first question was far from unanimous, but the leading candidate for overall responsibility for the nonstructural components was the engineer who designs the building's structural system. Other opinions indicated that the designer or engineer responsible for a specific component should be given this responsibility, or should work together with the building's structural engineer. Another suggested approach was for the nonstructural component designer to hire directly a structural design engineer, who need not be the building's structural engineer. This approach might be more practical when tenant work is under a separate contract. The common thread in each of these is clear; an engineer qualified to design seismic anchorage is always needed. This approach seems to be both practical and legally defensible, because engineers are required by license laws in California to practice only within their scope of expertise, and therefore mechanical and electrical engineers may rightfully believe they should not design seismic anchorage.

The issue of who should *assign* the responsibility is discussed next. It is recognized that any decisions regarding delegation of responsibility for seismic design of nonstructural components must take place at the project management level, with the prime design professional for the project (often, but not always, the architect) making those decisions. Agreement was unanimous that any decision to assign responsibility would also depend on the type and complexity of the project's nonstructural components. Therefore responsibility for nonstructural components would likely need to be tailored to suit a specific project.

The discussions regarding how and in what form the responsibility should be assigned generated a very useful solution. Because the architects present did not believe that the standard AIA contract forms were of any help in this matter, a responsibilities chart was suggested. This was a simple form on which all of the nonstructural components to be installed in a specific project could be listed on one axis, with the other axis listing all of the project's design consultants and contractors. Each component could then be assigned to one (or possibly more than one) of the consultants or contractors, by simply marking a box on the form. Not only would this serve as a simple project management tool, but this information could also be included with a permit submittal so that the plan-check engineer and inspectors would also know who was responsible. A sample of such a form is provided as a Job Aid in the ATC/SEAOC Training Curriculum Notebook (contact ATC for more information).

Key Issue 2—Installation Observation:

- Should California building codes require on-site observation of nonstructural component installation by design professionals?
- Who should be responsible for observing seismic bracing of nonstructural components?
- What level of design professional observation is appropriate?

Providing observation of nonstructural component installation by a design professional was strongly supported by most participants. Observation by the person responsible for designing a seismic restraint system was considered an excellent method to reduce the potential for earthquake damage. Observation of the installation would supplement rather than replace current building department inspections. If this type of observation is not specifically required by law, there will be no budget to implement it as a voluntary recommendation. In the State of Oregon, architects are currently required by the professional license laws to observe certain types of construction.

To implement such a provision as part of the code would require a modification to the current 1998 California Building Code (CBC) that is based on the 1997 UBC. At this time, the only method of modifying the 1998 CBC or 1997 UBC provisions would be by adoption of a code amendment at the local government level. Subsequent to the Northridge earthquake, a few jurisdictions in southern California adopted, and are enforcing, additional structural observation

requirements for certain types of elements in a building's structural system. Therefore, such action is not without precedent, but currently it only has been attempted in a limited number of jurisdictions. The other available method to implement observation for nonstructural components is through the code change process developing the International Building Code (IBC), which will replace the UBC in the year 2000. Due to the schedule for publishing the 2000 edition of the IBC, there is no longer, at this writing, 1999, any possibility that such a change could be considered for inclusion in that edition. The earliest time that such a provision could be adopted on a widespread basis would be in the year 2004 or 2005. Although the success of either of these approaches is problematic, it is certainly possible, and worth pursuing if sufficient support for such a code change can be found.

The question of who should perform required observation is not a part of this issue, because it is more closely linked to the responsibility for designing the seismic restraint of nonstructural components. The clear intention is that the person or firm given that responsibility would be the logical choice to make the observations.

The discussion on the necessary level of observation to be provided did not have a complete resolution. It was suggested that providing a level of observation that is just sufficient to supplement the level of local inspection provided would be adequate. That may be a good concept but it could be difficult to define or determine the level of local inspection that occurs, and this could result in significant variations among jurisdictions. A suggestion was made that observation should primarily focus on life-safety situations, such as anchorage of precast cladding elements or other falling hazards, but that it could also include other performance objectives specified by the owner.

The basic problem in defining what constitutes observation is that there is currently no standard in the code on exactly what level of observation is expected, even for those structural observations that are required by the code. This led to a suggestion that a better definition of observation was needed and that guidelines for observation by a design professional definitely need to be developed. It would be impractical and too costly to expect a design professional to observe each and every connection or anchorage.

Key Issue 3—Client Education

- How can we educate clients to care about seismic issues?
- Who should communicate seismic performance options (including observation) to clients?

To convince owners of the value-added aspect of observing seismic construction, including the installation of seismic restraint of nonstructural components, the consequences of damage to buildings must be clearly explained by comparing the potential for damage with and without this observation. This difference may be difficult to quantify but it is possible to compare levels of earthquake damage that have occurred to typical commercial construction with that in hospitals where observation is used. The costs of post-earthquake repairs, the loss-of-use cost, and the potential for very costly litigation or claims for injuries that could result can provide a sound economic argument. In addition, the economics-driven, less-than-complete enforcement of seismic bracing and anchorage requirements must be pointed out to the client.

If this information on the benefits of observation is delivered to owners by the design professional, only during negotiations, it may appear to be simply a method to increase designer fees. On the other hand, if this message comes from lenders and insurers or from business organizations like the Building Owners and Managers Association, it would be much more successful in creating a demand for such observation.

About this Briefing Paper Series

Briefing papers in this series are concise, easy-to-read summary overviews of important issues and topics that facilitate the improvement of earthquake-resistant building design and construction quality.

This briefing paper was prepared by the ATC/SEAOC Joint Venture, a partnership of the Applied Technology Council (ATC) and the Structural Engineers Association of California (SEAOC). Funding for the series was provided by the California Seismic Safety Commission, Proposition 122 Retrofit Practices Improvement Program.

Copies of Briefing Papers can be downloaded from ATC's World Wide Web site (www.atcouncil.org), or are available from:

ATC/SEAOC Joint Venture
c/o Applied Technology Council
555 Twin Dolphin Drive, Suite 550
Redwood City, California 94065

Briefing Paper 2

Roles and Responsibilities of Engineers, Architects, and Code Enforcement Officials

Part C: Improving Nonstructural Component Performance

About Roles and Responsibilities

This Briefing Paper 2, *Roles and Responsibilities of Engineers, Architects, and Code Enforcement Officials in Producing Seismic Resistant Construction for Nonstructural Components*, consists of three parts. Part A provides an overview of why this topic is essential for the reduction of earthquake losses. In particular, it discusses how roles and responsibilities are changing and how these changes can affect quality control and the seismic resistance of specific nonstructural components. Part B discusses the major issues raised at the 1999 Workshop on Roles and Responsibilities held in Oakland, California. This Part C provides the workshop's recommendations for changes in practice and for more education to help resolve several of the workshop issues. The goal of Briefing Paper 2 is the improvement of overall construction quality, and hence of the seismic performance, of nonstructural components and complete nonstructural systems.

Introduction

The 1999 Workshop on Roles and Responsibilities, held in Oakland, California, explored how the division of roles and responsibilities among members of the design, code enforcement, and construction elements of building projects affects the resulting quality and seismic performance of nonstructural building components. Three specific recommendations for changes in practice and education were derived from that workshop. Initially, six issues listed in Part B were considered in group discussions. However, not all of these issues were incorporated into the three key issues that were considered in making the final recommendations. This does not mean that the other issues are not important. Instead, it was decided that to obtain meaningful results from the workshop, the issues had to be ranked. This Part C describes the basis for the recommendations made regarding the highest-priority issues.

Recommendations that Address Three Key Issues for Construction Quality and Seismic Performance of Nonstructural Components

Each of the three key issue questions derived from the workshop are discussed separately in the order of priority established by a vote of the workshop participants.

1. The first issue addresses responsibility:

- Who should be responsible for ensuring that nonstructural components and systems are properly installed to resist earthquakes?
- How should the responsibility for nonstructural components be assigned?
- Assigned by whom?
- In what form?

The answer to the first question was far from unanimous, but the leading candidate for overall responsibility for the nonstructural components was the engineer who designs the building's structural system. Other opinions indicated that the designer or engineer responsible for a specific component should be given this responsibility, or should work together with the building's structural engineer. Another suggested approach was for the nonstructural component designer to hire directly a structural design engineer, who need not be the building's structural engineer. This approach might be more practical when tenant work is under a separate contract. The common thread in each of these is clear; an engineer qualified to design seismic anchorage is always needed. This approach seems to be both practical and legally defensible, because engineers are required by license laws in California to practice only within their scope of expertise, and therefore mechanical and electrical engineers may rightfully believe they should not design seismic anchorage.

The issue of who should *assign* the responsibility

is discussed next. It is recognized that any decisions regarding delegation of responsibility for seismic design of nonstructural components must take place at the project management level, with the prime design professional for the project (often, but not always, the architect) making those decisions. Agreement was unanimous that any decision to assign responsibility would also depend on the type and complexity of the project's nonstructural components. Therefore responsibility for nonstructural components would likely need to be tailored to suit a specific project.

The discussions regarding how and in what form the responsibility should be assigned generated a very useful solution. Because the architects present did not believe that the standard AIA contract forms were of any help in this matter, a responsibilities chart was suggested. This was a simple form on which all of the nonstructural components to be installed in a specific project could be listed on one axis, with the other axis listing all of the project's design consultants and contractors. Each component could then be assigned to one (or possibly more than one) of the consultants or contractors, by simply marking a box on the form. Not only would this serve as a simple project management tool, but this information could also be included with a permit submittal so that the plan-check engineer and inspectors would also know who was responsible. A sample of such a form is provided as a Job Aid in the Nonstructural Building Components Curricula of the Built to Resist Earthquakes Seminar Series produced in 1999 as part of the California Seismic Safety Commission's project on Continuing Education for Design and Code Enforcement Professionals.

Delegation of responsibility for seismic design of nonstructural components must take place at the project management level.

2. The second issue addresses installation observation:

- Should California building codes require on-site observation of nonstructural component installation by design professionals?
- Who should be responsible for observing seismic bracing of nonstructural components?
- What level of design professional observation is appropriate?

Providing observation of nonstructural component installation by a design professional was strongly supported by most participants. Observation by the person responsible for designing a seismic restraint system was considered an excellent method to reduce the potential for earthquake damage. Observation of the installation would supplement rather than replace current building department inspections. If this type of observation is not specifically required by law, there will be no budget to implement it as a voluntary recommendation. In the State of Oregon, architects are currently required by the professional license laws to observe certain types of construction.

To implement such a provision as part of the code would require a modification to the current 1998 California Building Code that is based on the 1997 UBC. At this time, the only method of modifying the 1998 CBC or 1997 UBC provisions would be by adoption of a code amendment at the local government level. Subsequent to the Northridge earthquake, a few jurisdictions in southern California adopted, and are enforcing, additional structural observation requirements for certain types of elements in a building's structural system. Therefore, such action is not without precedent, but currently it only has been attempted in a limited number of jurisdictions. The other available method to implement observation for nonstructural components is through the code change process developing the International Building Code (IBC). Due to the schedule for publishing the 2000 edition of the IBC, there is no longer, at this writing, 1999, any possibility that such a change could be considered for inclusion in that edition. The earliest time that such a provision could be adopted on a widespread basis would be in the year 2004 or 2005. Although the success of either of these approaches is problematic, it is certainly possible, and worth pursuing if sufficient support for such a code change can be found.

The question of who should perform required

observation is not a part of this issue, because it is more closely linked to the responsibility for designing the seismic restraint of nonstructural components. The clear intention is that the person or firm given that responsibility would be the logical choice to make the observations.

The discussion on the necessary level of observation to be provided did not have a complete resolution. It was suggested that providing a level of observation that is just sufficient to supplement the level of local inspection provided would be adequate. That may be a good concept but it could be difficult to define or determine the level of local inspection that occurs, and this could result in significant variations among jurisdictions. A suggestion was made that observation should primarily focus on life-safety situations, such as anchorage of precast cladding elements or other falling hazards, but that it could also include other performance objectives specified by the owner.

The basic problem in defining what constitutes observation is that there is currently no standard in the code on exactly what level of observation is expected, even for those structural observations that are required by the code. This led to a suggestion that a better definition of observation was needed and that guidelines for observation by a design professional definitely need to be developed. It would be impractical and too costly to expect a design professional to observe each and every connection or anchorage.

There currently is no standard in the code on exactly what level of observation is expected, even for those structural observations that are required by the code.

3. The third issue addresses clients:

- How can we educate clients to care about seismic issues?
- Who should communicate seismic performance options (including observation) to clients?

To convince owners of the value-added aspect of observing the installation of the seismic restraint of nonstructural components, the consequences of damage to those components must be clearly explained by comparing the potential for damage with and without this observation. This difference may be difficult to quantify but it is possible to compare levels of earthquake damage that have occurred to typical commercial construction with that in hospitals where observation is used. The costs of post-earthquake repairs, the loss-of-use cost, and the potential for very costly litigation or claims for injuries that could result can provide a sound economic argument. In addition, the economics-driven, less-than-complete enforcement of seismic bracing and anchorage requirements must be pointed out to the client.

If this information on the benefits of observation is delivered to owners by the design professional, only during negotiations, it may appear to be simply a method to increase designer fees. On the other hand, if this message comes from lenders and insurers or from business organizations like the Building Owners and Managers Association, it would be much more successful in creating a demand for such observation.

Summary

The workshop recommended three definitive actions to reduce earthquake damage losses associated with poor seismic performance of nonstructural components.

1. The responsibility for seismic restraint of each nonstructural building component must be defined, and should be delegated to an engineer qualified in seismic design procedures.

2. Observation of the seismic restraint provided for nonstructural components should be performed by the person or firm delegated responsibility for the restraining system.

3. Owners, lenders, and insurers must be made aware of the potential for earthquake damage to nonstructural components and the consequences of this damage. Current practice does not require installation observation nor provide for proper design or design review of the seismic restraints.

Damage directly caused by nonstructural component failure during earthquakes, and related damage, continues to be a major concern.

Further detailed information related to vulnerabilities of specific nonstructural components are presented in the Built to Resist Earthquakes Seminar Series: Nonstructural Building Components, Session 2, Improving the Performance of Typical Building Components. Additional information can also be found in the publications listed below.

Resources

ATC, 1998, *Proceedings of Seminar on Seismic Design, Retrofit, and Performance of Nonstructural Components*, Applied Technology Council Report ATC 29-1, Redwood City, California.

CSSC, 1991, *Architectural Practice & Earthquake Hazards*, A report of the committee on the Architect's Role in Earthquake Hazard Mitigation, California Seismic Safety Commission Report No. SSC 91-10, Sacramento, California

CSSC, 1995, *Turning Loss to Gain*, Chapter III, California Seismic Safety Commission Report No. SSC 95-01

Hall, J.F. (editor), 1995 Northridge Earthquake Reconnaissance Report, *Earthquake Spectra*, Supplement C to Volume 11, Earthquake Engineering Research Institute, Oakland, California

Lagorio, H.J., 1990, *Earthquakes: An Architect's Guide to Nonstructural Hazards*. John Wiley & Sons, Inc.

NIST, 1996, *State-of-the-Art Report on Seismic Design Requirements for Nonstructural Building Components*, National Institute of Standards and Technology, Report NISTIR 5857, Gaithersburg, Maryland.

About this Briefing Paper Series

Briefing papers in this series are concise, easy-to-read summary overviews of important issues and topics that facilitate the improvement of earthquake-resistant building design and construction quality.

This briefing paper was prepared by the ATC/SEAOC Joint Venture, a partnership of the Applied Technology Council (ATC) and the Structural Engineers Association of California (SEAOC). Funding for the series was provided by the California Seismic Safety Commission, Proposition 122 Retrofit Practices Improvement Program.

Copies of Briefing Papers can be downloaded from ATC's World Wide Web site (www.atcouncil.org), or are available from:

ATC/SEAOC Joint Venture
c/o Applied Technology Council
555 Twin Dolphin Drive, Suite 550
Redwood City, California 94065

Briefing Paper 2

Roles and Responsibilities of Engineers, Architects, and Code Enforcement Officials

Part A: Evolving Practice Pertaining to Nonstructural Components

About Roles and Responsibilities

This Briefing Paper 2, *Roles and Responsibilities of Engineers, Architects, and Code Enforcement Officials in Producing Seismic Resistant Construction for Nonstructural Components*, consists of three parts. This Part A provides an overview of why this topic is essential for the reduction of earthquake losses. In particular, it discusses how roles and responsibilities are changing and how these changes can affect quality control and the seismic resistance of specific nonstructural components. Part B discusses the major issues raised at the 1999 Workshop on Roles and Responsibilities held in Oakland, California. Part C provides the workshop's recommendations for changes in practice and for more education to help resolve several of the workshop issues. The goal of Briefing Paper 2 is the improvement of overall construction quality, and hence of the seismic performance, of nonstructural components and complete nonstructural systems.

A significant portion of injuries, and often more than one-half of the total economic loss in earthquakes, stems from damage to nonstructural building components.

Introduction

The California Seismic Safety Commission's continuing education project for design and code enforcement professionals held a workshop in Oakland, California on January 20, 1999, to explore how the division of roles and responsibilities among members of the design, code enforcement and construction elements of building projects affects the seismic performance of nonstructural building components. The workshop's 25 participants included architects, local and state agency building officials, plan-check engineers and inspectors, general and specialty contractors, and structural and mechanical design engineers. The workshop focused on the installation of nonstructural building components and systems that are typically not the direct responsibility of the architect or engineer of record.

A significant portion of injuries, and often more than one-half of the total economic loss in earthquakes, stems from damage to nonstructural building components. Economic losses are rarely limited to the cost of repairing individual damaged components. Losses often include collateral damage to other related equipment and to building contents and the indirect costs associated with the time necessary to complete repairs. In fact, the costs associated with nonstructural component damage can be two to three times the cost of repairing structural damage caused by earthquakes. As a result, specific responsibility for the seismic performance of all building components and systems must be clearly established and understood by those designing their installation, and by those performing the actual installation and inspection. Please refer to another Briefing Paper in the Built to Resist Earthquakes Seminar Series, *Seismic Response of Nonstructural Building Components*, for a more detailed discussion of nonstructural component vulnerability and proper seismic restraint of these components.

Design-Build and Fast-Track Projects

Regardless of the project delivery method employed, careful attention to the design and installation of nonstructural components is needed in order to achieve reliable postearthquake performance. Current delivery methods include a high proportion of design-build and fast-track project design and construction that has increased both the complexity and the importance of coordination and communication among all of the entities involved. The organiza-

tion of project teams, the financial accountability, and increasing owner involvement in choosing design consultants and contractors, are all changing traditional roles and responsibilities. At the same time, the nature and level of involvement or oversight by the primary designers with respect to nonstructural components appears to be diminishing. Specialty contractors are regularly delegated the design, fabrication, and installation responsibility for nonstructural components (e.g., window walls, cladding, veneers, fire protection systems) whose seismic performance is critical to both occupant safety and postearthquake functionality. These contractors and mechanical and electrical system design engineers may be given contractual responsibility for seismic performance of the components and systems they specify or install, but they may not have sufficient knowledge or experience to execute that responsibility without assistance from the structural engineer.

When responsibility is not assigned to the consultant best able to address the issue, and no provision is made for a review of the anchorage by that individual, improper anchorage and resulting earthquake damage can occur.

The architect has traditionally held the responsibility for the overall project coordination, including discussions with the client, negotiating contracts with other design consultants and paying for their services, writing specifications for all elements of the construction, and dividing roles and responsibilities among members of the design team. With these financial and procedural arrangements, the architect had the ability to control the quality of the finished product. Design-build projects usually have different financial arrangements, in which the general contractor may hire some of the design consultants or the owner may desire to select consultants. In fact, the contractor may have principal control of certain design processes, role definition, schedule, and finances. Such arrangements significantly alter accountability, division of responsibilities, and lines of communication, placing the architect in a noticeably less dominant role without necessarily reducing the owner's perception of the architect's span of control. In some cases, the architect is obligated for reasons of liability to abdicate responsibilities under these arrangements. However, the result may be that no one takes responsibility for the necessary coordination. This situation increases the potential that the seismic performance of nonstructural building components will not be adequately addressed.

Almost all nonresidential projects are now considered "fast-track" with multiple subdivisions of a single building project into distinct submittal packages. The current trend goes far beyond the common practice of separating the building shell from the tenant improvements. While a fast-track process can speed a project's completion, it substantially complicates coordination because a complete design team is usually not established before drawings and documents are started. This arrangement can cause problems when decisions early in a project delegate responsibility to entities who are not yet under contract and who may not expect to be given that responsibility. Failure to involve subcontractors or design consultants early in a project's development can result in expensive revisions to previous design or fabrication work. Adequate communication among designers during fast-track projects is difficult to achieve because work needing coordination is often occurring in different time frames. The deferred submittals used to postpone detailed descriptions of some components or products until suppliers have been selected also create difficulties for building department plan-checking and inspection efforts.

Deferred Submittals

Most product delivery methods incorporate a commonly used process defined in the building code as a "deferred submittal." Typically, contract documents for the stairs, elevators, exterior cladding, window walls, and sometimes the entire mechanical or electrical systems serving tenant spaces, are not provided with the application for the building permit. The code does allow this to occur, and since its 1994 edition, the Uniform Building Code (UBC) has contained specific rules for the review of deferred submittal items. The UBC requires all

deferred submittal items to be listed on the plans and that the architect or engineer of record review and accept all deferred submittal documents prior to forwarding them to the building department for review and approval. However, in practice, the design and fabrication or shop drawings for these items are not always thoroughly reviewed by the architect or engineer, and sometimes are never submitted to the building department. Assigning and completing the responsibility for the review of these items by both the building designer and the code enforcement officials is crucial for ensuring that these components can adequately withstand earthquake forces.

A common deferred responsibility is the seismic anchorage of mechanical equipment to the building's structural framing. In a typical situation, the mechanical designers or contractors may expect the structural engineer to accommodate them with specifically designed parts of that anchorage. The structural engineer, on the other hand, may believe that this is outside the engineer's responsibility, because specific information to accomplish the task was not available during the structural design phase, or it was not included in the contract. When responsibility is not assigned to the consultant best able to address the issue, and no provision is made for a review of the anchorage by that individual, improper anchorage and resulting earthquake damage can occur. Building departments usually, but not always, require the submittal of design and construction documents for equipment anchorage. If the anchorage is designed by a person unfamiliar with seismic design principles and not reviewed at all, or only reviewed by someone who is likewise insufficiently knowledgeable, the equipment may be at great risk of earthquake damage. The substantial changes in the 1997 UBC for calculating nonstructural component seismic design forces and calculating the much larger anchorage forces that apply to roof-mounted equipment will undoubtedly increase the unintentional noncompliance with code requirements. Similar situations of inadequate design or design review also occur for other nonstructural components, even those that are not part of deferred submittals.

About this Briefing Paper Series

Briefing papers in this series are concise, easy-to-read summary overviews of important issues and topics that facilitate the improvement of earthquake-resistant building design and construction quality.

This briefing paper was prepared by the ATC/SEAOC Joint Venture, a partnership of the Applied Technology Council (ATC) and the Structural Engineers Association of California (SEAOC). Funding for the series was provided by the California Seismic Safety Commission, Proposition 122 Retrofit Practices Improvement Program.

Copies of Briefing Papers can be downloaded from ATC's World Wide Web site (www.atcouncil.org), or are available from:

ATC/SEAOC Joint Venture
c/o Applied Technology Council
555 Twin Dolphin Drive, Suite 550
Redwood City, California 94065

Table of Contents - Wood Frame Construction

Briefing Paper 3: Seismic Response of Wood Frame Construction

Lesson W1 The Load Path in Wood Frame Construction

1.1 The Load Path in Wood Frame Construction ---------- W-1

Lesson W2 Improving the Earthquake Performance of Wood Frame Construction

2.1 Diaphragms ---------- W-7

2.2 Shear Walls (Inspection Checklist Job-Aid) ---------- W-23

2.3 Connections between Seismic Elements ---------- W-43

2.4 Foundation Systems ---------- W-67

2.5 Irregular Configurations ---------- W-69

2.6 Design Issues in Buildings with Concrete and Masonry Walls ---------- W-77

Lesson W3 Seismic Retrofitting of Wood-Frame Construction—Special Considerations

3.1 Retrofit of Multi-Family Residential Buildings with Soft First Story --------- W-81

3.2 Out-of Plane Anchorage Retrofit of Diaphragm-to-Wall Connections in Concrete and Masonry Wall Buildings ---------- W-87

Job Aid

Inspection Checklist for Wood Frame Shear Walls

List of Figures - Wood Frame Construction

W1-1 Diaphragms act like a horizontal steel beam ---------- W-1

W1-2 Diaphragm chord and collector members---------- W-2

W1-3 Shear walls act like a vertical cantilever steel beam ---------- W-3

W1-4 Shear wall chord and collectors ---------- W-3

W1-5 Load path in a typical wood shear wall building ---------- W-5

W2-1 Typical diaphragms ---------- W-8

W2-2 UBC Sheathing layout patterns---------- W10

W2-3 Overdriven nail ---------- W-10

W2-4 Staple fastener layout ---------- W-15

W2-5 Multi-row fastener layout ---------- W-16

W2-6 Simple shear transfer between stories using sheathing ---------- W-24

W2-7 More difficult to construct shear transfer using nails and framing clips ---------- W-24

W2-8 Typical shear wall elevation ---------- W-26

W2-9 Removal of existing sheathing for shear wall retrofitting and treatment for unblocked joints---------- W-27

W2-10 Standard shear wall height-to-width ratio ---------- W-29

W2-11 Shear wall pier height-to-width ratio when force transfer is provided around openings---------- W-29

W2-12 Single wall line with incompatible sheathing combination for seismic resistance ---------- W-32

W2-13 Diaphragm force distribution ---------- W-33

W2-14 Foundation sill penetrations ---------- W-38

W2-15 Roof connection to exterior wall at eave---------- W-44

W2-16 Roof connection to exterior wall at gable end ---------- W-44

W2-17 Roof connection to exterior wall at balloon-framed studs ---------- W-45

W2-18 Platform-framed wall with lap-spliced parapet stud ---------- W-45

W2-19 Missing attic shear-wall extension---------- W-46

W2-20 Attic shear wall between trusses ---------- W-47

W2-21 Elevation view of attic shear wall between trusses---------- W-47

W2-22 Attic shear walls at walls separating two dwelling units ---------- W-47
W2-23 Alternative retrofit connections for roof sheathing to framing ---------- W-48
W2-24 Through-floor shear-wall connection with solid-sawn framing ---------- W-50
W2-25 Elevation of through-floor shear transfer; solid-sawn framing ---------- W-51
W2-26 Through-floor shear-wall connection with I-joist framing ---------- W-51
W2-27 Elevation of through-floor shear transfer; I-joist framing ---------- W-52
W2-28 Plan section at through-floor shear transfer ---------- W-52
W2-29 Exterior wall through-floor shear transfer ---------- W-53
W2-30 Shear-wall connection to floor diaphragm without wall below (discontinuous) ---------- W-54
W2-31 Connection of floor diaphragm to shear wall below ---------- W-54
W2-32 Shear walls above and below offset out-of-plane with discontinuous floor diaphragm ---------- W-55
W2-33 Through-floor bracket-and-rod-type tie-down ---------- W-56
W2-34 Plan view at bracket-type tie-down ---------- W-56
W2-35 Through-floor nailed strap-type tie-down ---------- W-57
W2-36 Plan view at strap-type tie-down ---------- W-57
W2-37 Multi-story continuous rod-type tie-down ---------- W-57
W2-38 Plan view at continuous rod tie-down ---------- W-58
W2-39 Typical foundation sill anchorage connection ---------- W-59
W2-40 Tie-down with embedded bolt ---------- W-62
W2-41 Tie-down with embedded strap ---------- W-62
W2-42 Tie-down with embedded continuous rod ---------- W-62
W2-43 Earthquake forces on foundations ---------- W-67
W2-44 Shallow foundation ---------- W-68
W2-45 Deep foundations ---------- W-68
W2-46 Building with weak and soft story, damaged in the Loma Prieta earthquake ---------- W-70
W2-47 Open front apartment with severe damage ---------- W-71
W2-48 Discontinuous shear wall configuration ---------- W-72
W2-49 Partial collapse of home due to diaphragm discontinuity ---------- W-73
W2-50 Hillside home with tall cripple walls that have failed ---------- W-74
W2-51 Building on a slope with uneven cripple walls ---------- W-75

W2-52 Diaphragm connection failure ---------- W-77
W3-1 Out-of-plane anchorage retrofit at wall pilaster ---------- W-88
W3-2 Typical flexible diaphragm to concrete wall anchorage ---------- W-90

Briefing Paper 3

Seismic Response of Wood-Frame Construction

Part A: How Earthquakes Affect Wood Buildings

Introduction

This Briefing Paper 3, *Seismic Response of Wood-Frame Construction*, consists of three parts that discuss how earthquakes affect wood-framed construction, including specifics regarding their earthquake-resisting elements, and identifies construction features required for good seismic performance. This Part A provides a brief overview of how earthquakes affect wood-frame construction and explains the load path in wood construction. Part B describes diaphragm chords and collector elements, lateral force transfer within diaphragms, and lateral force transfer from diaphragms to shear walls or frames. Part C discusses wood-framed, shear-wall construction including stiffness issues and hold-downs.

Earthquake Performance of Wood-Frame Buildings

Buildings are at rest when an earthquake arrives, and then are suddenly accelerated laterally by horizontal earthquake ground motion (Figure 1). The ground shaking is transferred to the building through its foundation. Although displacements are easier to visualize, it is the acceleration of the foundation being transferred to the entire building structure that causes forces to develop in the building structure as it attempts to resist the movement.

Earthquake ground motions can contain a similar period of vibration to that of the building and resonating motions will increase the resulting forces. Wood buildings are generally low-rise and use resisting systems like plywood shear walls that result in very short fundamental periods of vibration. Shallow earthquakes with particularly strong short-period motions are common in California and can strongly affect wood-frame buildings. This is especially true when a short-period building is close to the epicenter, and is subjected to "near source" ground motions, which are particularly rich in short-period waves (for more information on earthquake ground motions, see Briefing Paper 1, Part A).

Modern wood-frame buildings generally have good earthquake performance, but older construction can exhibit serious deficiencies that have resulted in deaths and serious injuries. Large apartment buildings with parking at ground level have collapsed and killed some of the occupants. Older houses often have a weakness in the cripple wall below the first-floor framing that can cause collapse of the cripple-wall level, or crawl space. While not usually life threatening, such damage can be very expensive to repair. Even newer construction in areas near active faults that were designed prior to enforcement of the 1997 *Uniform Building Code* (UBC) may not perform as well as expected.

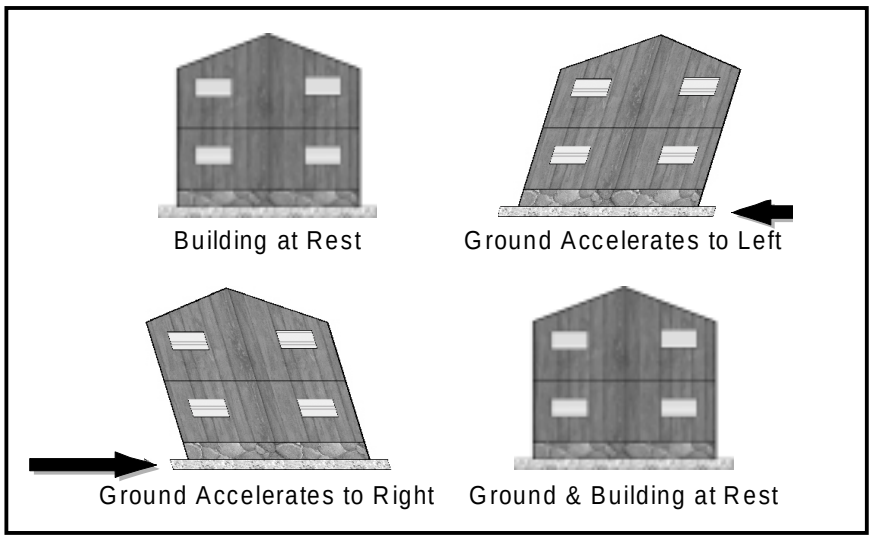

Figure 1. Cyclic response of wood buildings to earthquake motions.

The Load Path in Wood Construction

Horizontal earthquake-resisting forces follow specific horizontal and vertical load paths through the structural elements of a wood building from the roof to the foundation, as shown in Figure 2. Horizontal elements of the building, namely, its roof and floors, are called diaphragms, and they serve to transmit seismic design forces to shear walls or frames acting as lateral-force-resisting elements at each story level. The lateral forces to be resisted are summed sequentially to the lower floors. The largest resisting force, which acts at the lowest level of the building, is known as the base shear.

The diaphragms, shear walls, frames, and foundations are the primary load-path elements in wood buildings, and all these elements must have the necessary strength and stiffness to transmit and resist earthquake forces. The elements must also be properly interconnected to provide a continuous load path, so that forces can reach the foundation. In wood-frame construction, the connections typically use nails or staples, bolts, sheet metal straps, and other steel connecting hardware to link the primary elements together. Many of these connections are specifically and solely dedicated to resisting or transmitting lateral forces and are not used to support vertical loads. For this reason, improper connections along the lateral load path may not be noticed during construction. However, improper connections will result in a weak link whose failure can result in serious damage when the building is subjected to an earthquake.

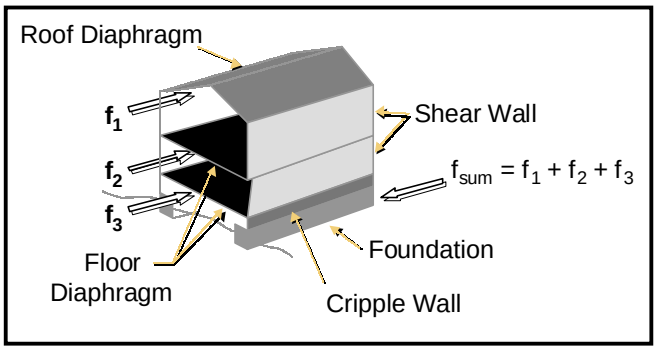

Figure 2. Lateral force load path. Note that horizontal elements resist horizontal forces (represented by double arrows); these forces are then transferred to the vertical elements, such as shear walls and cripple walls.

Resources for Additional Reading

ATC, 1995, *Cyclic Testing of Narrow Shear Walls*, Applied Technology Council, Report ATC-R-1, Redwood City, California.

Breyer, D. E., 1993, *Design of Wood Structures*, 3rd Edition, McGraw-Hill, Inc., New York, NY.

Commins, A. and Gregg, R., 1996, *Effect of Hold-Downs and Stud-Frame Systems on the Cyclic Behavior of Wood Shear Walls*, Simpson Strong-Tie Company, Pleasanton, California.

FEMA, 1998, *Seismic Retrofit Training for Contractors and Inspectors*, Federal Emergency Management Agency, Emmitsburg,

Holmes, W. T., and Somers, P. (editors), 1996, "Northridge Earthquake Reconnaissance Report, Vol. 2, Chapter 6: Wood Buildings," *Earthquake Spectra*, Supplement C to Volume 11, Earthquake Engineering Research Institute, Oakland, California.

SEAOC, 1997, *Seismic Detailing Examples for Engineered Light-Frame Timber Construction*, Structural Engineers Association of California (SEAOC), Sacramento, California.

SEAOC, 1997, *Guidelines for Diaphragms and Shear Walls*, SEAOC, Sacramento, California.

SOHA, 1998, *Home-Builders Guide to Seismic-Resistant Construction*, prepared by SOHA Engineers, San Francisco, published by the Federal Emergency Management Agency, FEMA 232 Report, Washington, DC.

About this Briefing Paper Series

Briefing papers in this series are concise, easy-to-read summary overviews of important issues and topics that facilitate the improvement of earthquake-resistant building design and construction quality.

This briefing paper was prepared by the ATC/SEAOC Joint Venture, a partnership of the Applied Technology Council (ATC) and the Structural Engineers Association of California (SEAOC). Funding for the series was provided by the California Seismic Safety Commission, Proposition 122 Retrofit Practices Improvement Program.

Copies of Briefing Papers can be downloaded from ATC's World Wide Web site (www.atcouncil.org), or are available from:

ATC/SEAOC Joint Venture
c/o Applied Technology Council
555 Twin Dolphin Drive, Suite 550
Redwood City, California 94065

Briefing Paper 3

Seismic Response of Wood-Frame Construction

Part B: The Role of Wood-Framed Diaphragms

Introduction

This Briefing Paper 3, *Seismic Response of Wood-Frame Construction*, consists of three parts that discuss how earthquakes affect wood-framed construction, including specifics regarding their earthquake-resisting elements, and identifies construction features required for good seismic performance. Part A provides a brief overview of how earthquakes affect wood-frame construction and explains the load path in wood construction. This Part B describes diaphragm chords and collector elements, lateral-force transfer within diaphragms, and lateral-force transfer from diaphragms to shear walls or frames. Part C discusses wood-framed, shear-wall construction including stiffness issues and hold-downs.

Diaphragms, Chords, and Collectors

Wood-frame buildings use wood construction for the roof and floors, and many low-rise concrete and masonry wall buildings use a wood-framed roof. These elements, called horizontal diaphragms, are constructed in modern buildings using wood structural panels (e.g., plywood, or oriented strand board) fastened with nails or staples to the various vertical-load-carrying wood framing members (e.g., sawn lumber joists and purlins, truss-type joists, or glulam or paralam beams) spanning between supporting walls or frames.

A diaphragm transfers lateral forces by acting like a horizontal beam (Figure 1). It spans between shear walls or frames located in the story below the diaphragm. During an earthquake, the diaphragm is subjected to horizontal forces that are based on its own mass and the tributary mass of the walls attached along its edges (for information on calculating tributary mass, see Briefing Paper 1, Part B). The exact amount of the force depends on the design ground acceleration and the type of resisting system being used. Wood-frame shear wall systems will generally produce smaller diaphragm design loads than buildings with heavier concrete or masonry walls.

Just like a vertical-load-carrying beam, the ends of the diaphragm must transfer the lateral forces

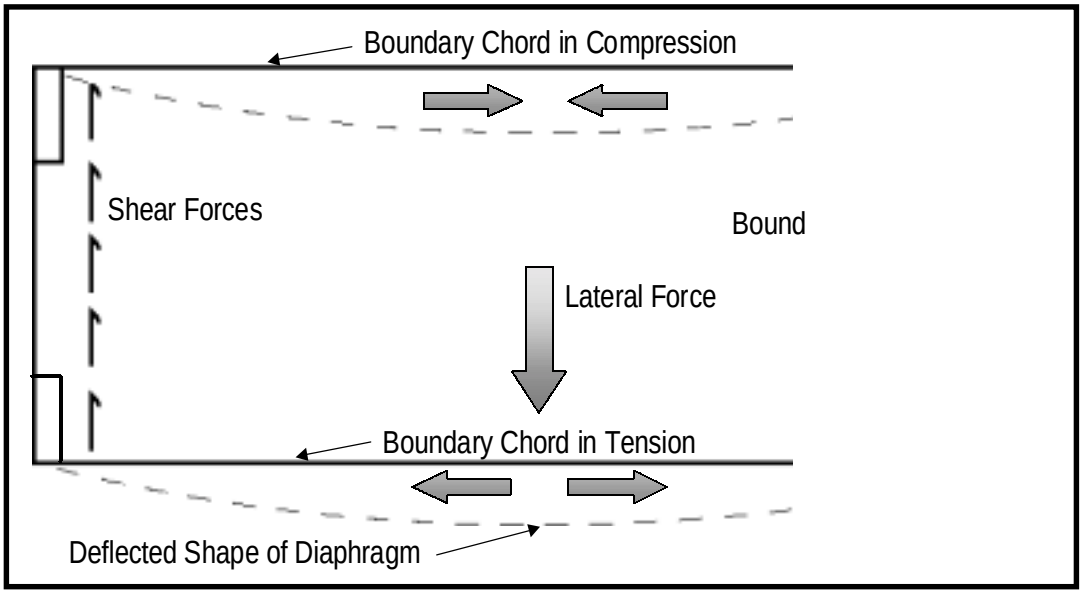

Figure 1. Plan view of diaphragm showing elements and deflected shape under lateral loading.

to the resisting shear walls or frames. The connection between the diaphragm edge or "boundary" and the walls or frames must transmit the shear forces. As described in Briefing Paper 1, Part D, this connection is provided by a load path member called a collector, which collects forces from along the diaphragm edge and carries them to the adjacent shear wall or frame (Figure 1). The specific type of collector member used will vary, depending on the construction of the walls below the diaphragm edges. In a building with a wood-framed diaphragm and concrete or masonry walls, the collector is normally a wood ledger that is bolted to the wall. When the walls below are wood-stud framing, the collector is usually the double top plate of the stud wall. At interior shear walls, the collector is most often a wood beam located in the plane of the roof or floor. In each of these cases, the collector transmits earthquake forces along its length and also carries vertical dead and live loads. Accounting for both the lateral and vertical loads is necessary when designing the connections and determining the size of the collector.

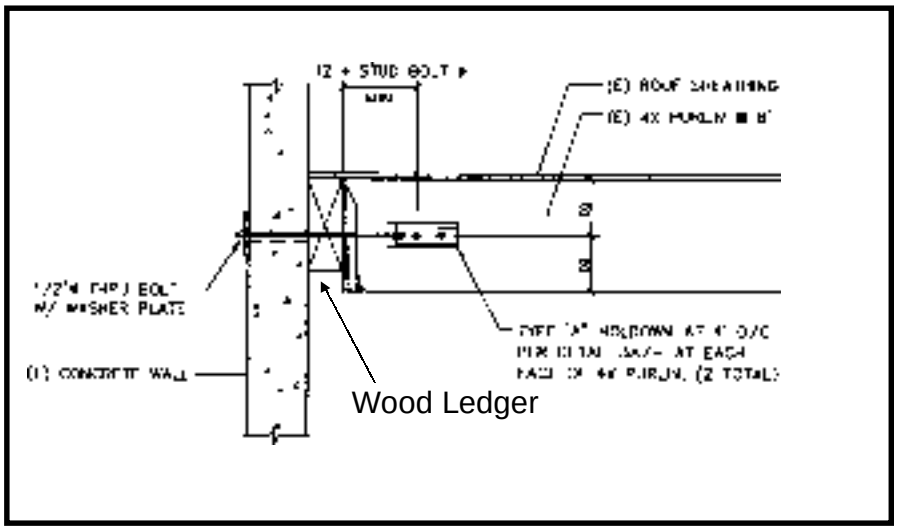

Figure 2. Collector element--wood ledger connecting roof/floor diaphragm to wall

As the diaphragm bends due to lateral forces (Figure 1), it creates either a tension or compression force in the chord member. This force is greatest at the middle of the appropriate span between the walls or frames. In wood-frame stud-wall construction, the double top plates of the wall perform the chord function. Because tension occurs in the chord, any splices in a top plate must be specifically designed to resist tension, or the chord will pull apart. If the top plate is cut to accommodate piping or other penetrating items, the portion removed can seriously reduce the plate's ability to function as a chord. Holes, large notches and other interruptions of the top plate should be properly reinforced to maintain the capacity to resist chord forces. Steel straps are often used to provide replacement capacity. However, straps often do not work well in compression, so that thicker top plates or supplemental blocking installed between studs and immediately below the top plates may also be necessary.

In wood stud wall buildings, the double top plate normally serves as both a boundary collector and a chord. This is because diaphragm forces acting parallel to the wall use the plate as a collector, and forces acting perpendicular to the wall use it as a chord. This dual purpose makes the wall top plate a critical element in the load path of wood-frame construction.

Force Transfer within a Wood Diaphragm

The sheathing fastened to the top surface of a wood-framed floor or roof diaphragm is a membrane that provides the diaphragm with the shear capacity to transmit lateral forces to the walls and frame elements (Figure 3). The shear capacity is primarily determined by the thickness of the sheathing and the size and spacing of the fasteners attaching the edges of each individual piece of sheathing to the framing below. However, the sheathing layout pattern and the use of wood blocking below the edges also affects the capacity. The layout of the short side of the sheathing edges is usually staggered between adjacent rows to provide greater capacity. When all edges occur over framing, the diaphragm is called fully blocked. A blocked diaphragm contains more fasteners, thereby increasing its resisting capacity. Unblocked

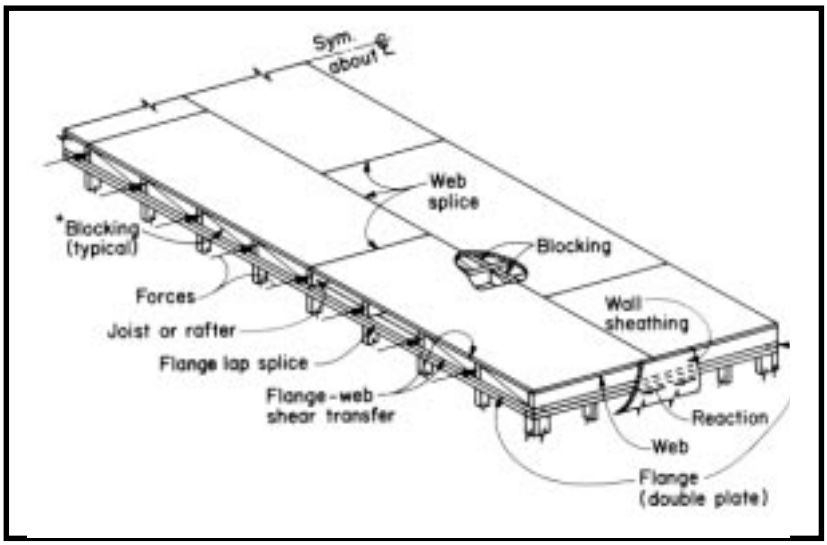

Figure 3. Sheathing in typical wood diaphragms.

diaphragms do not have a nailing surface below the long edges of the sheathing and consequently they have less capacity. The minimum thickness (width) of the framing below sheathing edges with closely spaced nails is also important. These framing members receive fasteners from two abutting panel edges, and the framing must be wide enough to prevent its splitting when two rows of fasteners are used.

Openings through diaphragms occur where duct shafts, stairs, and skylights are located. These openings interrupt the flow of forces through the diaphragm. If the openings are large enough, special straps along their edges are required to complete the load path and transfer forces around the opening. A stair or other opening along a diaphragm boundary edge can sometimes interrupt a collector or chord member, so special attention must be given to the load path when openings occur along edges.

Wood diaphragms also provide bracing for out-of-plane forces on walls. The out-of-plane earthquake forces are a result of the diaphragm pushing or pulling on the walls in response to building drift and also from the bending of the diaphragm itself. Adequate resistance for out-of-plane forces is important in every building. It is particularly critical when the walls are concrete or masonry, and the diaphragm is wood construction. The out-of-plane loads caused by concrete or masonry walls attached to the diaphragm are large, and if inadequate connections are provided, the walls may pull away from the roof or floor. As shown in Figure 4, this can result in a collapse of the roof or floor in that region, and the wall itself may also fall. To prevent this type of failure, additional load path connections are needed to secure the diaphragm to the walls. Diaphragm beams and purlins perpendicular to the wall must be anchored directly to the concrete or masonry wall. In addition, the anchor connection to the wood members must be symmetrical. Therefore, if the anchor is mounted to the side face of a beam, an identical anchor should be placed on the opposite beam face. Where beams perpendicular to the wall

Figure 4. Concrete Tilt-Up Wall Building with Failure at the Wall-to-Roof Connection

are widely spaced, additional lines of blocking may be needed to provide a load path for the out-of-plane wall anchorage.

Wall anchors produce additional stress within the diaphragm because the out-of-plane anchorage force must be resisted by the nailing of diaphragm sheathing along the line of the anchored beams. An unblocked diaphragm normally requires extra fasteners along panel edges occurring over those anchored beams. The code also requires continuous cross ties between walls on opposite sides of the building to resist out-of-plane loads. Where beams are not a single continuous piece across the entire diaphragm, the individual beams must be spliced to provide this continuous tie. These splices may be constructed using steel plates with bolts through the beams and may also require welded connections where beams intersect interior steel columns.

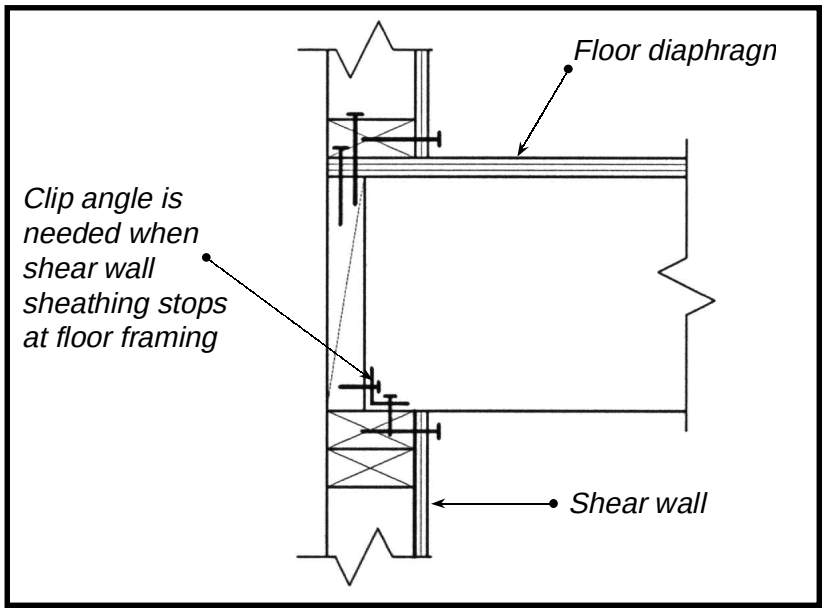

Figure 5. Connection of Floor Rim Joist or Blocking to Top Plate of Wall Below

Transfer of Diaphragm Forces to Walls or Frames

The sheathing fasteners along the diaphragm boundary edges transfer forces out of the diaphragm to the collectors or directly to shear walls or frames. This makes those locations particularly important for providing a complete load path. However, this is only one piece of the load path between the horizontal diaphragm and the vertical resisting elements below. The boundary edge framing member (edge beam, rim joist, or blocking) below the sheathing must also be attached to a shear wall top plate, or a wood nailer attached to the top of a frame beam to complete the transfer of forces. Several methods can be used for this connection, depending on how the designer details the shear transfer. Rim joists and edge blocking can be connected to wall plates using sheet metal angles and nails, as shown in Figure 5•3. Alternatively, the wall sheathing can be fastened to both the diaphragm edge member and the wall top plate. Regardless of the specific details used, this part of the load path must be provided.

Resources for Additional Reading

ATC, 1995, *Guidelines for the Design of Horizontal Wood Diaphragms*, Applied Technology Council, Report ATC-7, Redwood City, California.

About this Briefing Paper Series

Briefing papers in this series are concise, easy-to-read summary overviews of important issues and topics that facilitate the improvement of earthquake-resistant building design and construction quality.

This briefing paper was prepared by the ATC/SEAOC Joint Venture, a partnership of the Applied Technology Council (ATC) and the Structural Engineers Association of California (SEAOC). Funding for the series was provided by the California Seismic Safety Commission, Proposition 122 Retrofit Practices Improvement Program.

Copies of Briefing Papers can be downloaded from ATC's World Wide Web site (www.atcouncil.org), or are available from:

ATC/SEAOC Joint Venture
c/o Applied Technology Council
555 Twin Dolphin Drive, Suite 550
Redwood City, California 94065

Briefing Paper 3

Seismic Response of Wood-Frame Construction

Part C: The Role of Wood-Framed Shear Walls

Introduction

This Briefing Paper 3, *Seismic Response of Wood-Frame Construction*, consists of three parts that discuss how earthquakes affect wood-framed construction, including specifics regarding their earthquake-resisting elements, and identifies construction features required for good seismic performance. Part A provides an overview of how earthquakes affect wood-frame construction and explains the load path in wood construction. Part B describes diaphragm chords and collector elements, lateral-force transfer within diaphragms, and lateral-force transfer from diaphragms to shear walls or frames. This Part C discusses wood-framed, shear-wall construction including stiffness issues and hold-downs.

The purpose of shear walls is to provide both the strength and stiffness necessary to resist lateral loads.

This discussion of shear walls (Figure 1) is limited to wood-stud wall framing using wood structural panel sheathing, because this is the predominant type of shear wall used to resist seismic forces in wood-frame buildings. Wood-stud shear walls resist lateral loads from earthquakes and wind, but only the earthquake-resisting aspects are emphasized herein. Other types of sheathing materials are allowed by the code, and steel-stud framing is also an alternative; however, these are not discussed. Also, steel frames used as resisting elements are not discussed.

The purpose of shear walls is to provide both the strength and stiffness necessary to resist lateral loads from the diaphragm immediately above and from the wall in the story above, and to transmit these horizontal loads down one story into either a shear wall in the story below or to the building foundation. Shear walls also usually carry vertical loads from the roof and floors above. However, a vertical-load-bearing wall is not always a shear wall. An exterior bearing wall may have wood structural sheathing applied to the exterior face for architectural purposes and may appear like a shear wall, but not be designed to resist earthquake forces. In engineered buildings, only those walls that are properly connected to the diaphragm and that have been provided with adequate resistance to sliding and uplift forces qualify as shear walls. Buildings using "conventional light-frame construction provisions" as their basis do not contain shear walls; instead they use what are called "braced wall panels." These braced wall panels perform the same function as shear walls, but they are not required to be analyzed for the forces they must resist.

Shear-Wall Strength and Stiffness

Wood-framed shear walls consist of double top plates, studs, and sole or sill plates, sheathed with wood structural panels on one or both sides. The sheathing and its attachment to the framing perform the same function as in a horizontal diaphragm; that is, they resist lateral loads in the plane of the wall. Because shear walls must have all sheathing edges blocked, the wall's strength capacity depends only on the sheathing

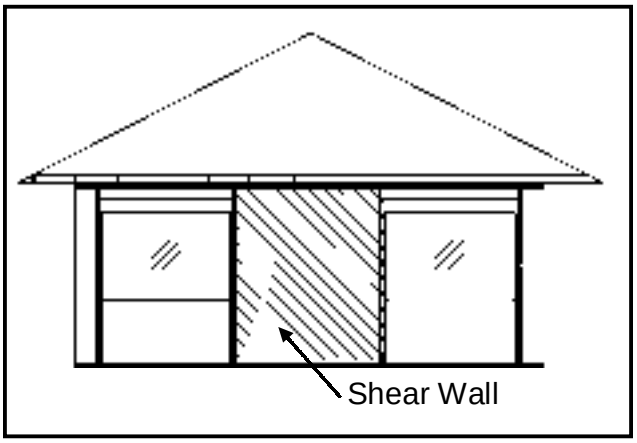

Figure 1 . Wood shear wall along exterior wall line.

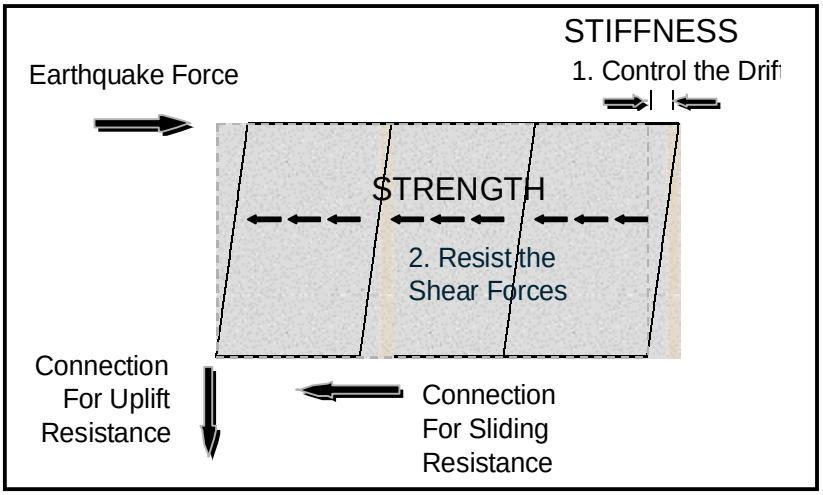

Figure 2. The two functions of shear walls are to provide stiffness and strength.

grade and thickness, and the fastener size and spacing.

Overturning and Hold-Downs

The stiffness of a shear wall, which is its ability to resist in-plane deflection, is a more complex issue, but it is the most important attribute for limiting earthquake damage (Figure 2). A shear wall is essentially a cantilever, fixed at its base but able to move laterally, in its plane, at the top. The amount of deflection that occurs at the top depends on the stiffness of the shear wall, which in turn is affected by the height-to-width ratio of the wall. If two identically constructed shear walls of equal height resist the same lateral force, the narrower wall undergoes greater deflection. This is one reason that the 1997 *Uniform Building Code* (UBC) reduced the maximum height-to-width ratio of shear walls from 3.5:1 to 2:1 for buildings located in Seismic Zone 4 (most of California). Other factors that influence stiffness include the shear strength capacity of the sheathing and its attachment, and the potential vertical slip that can occur in the hold-down connections, located at the ends of the wall to resist vertical uplift loads.

The 1997 UBC reduced the maximum height-to-width ratio of shear walls from 3.5:1 to 2:1 for buildings located in Seismic Zone 4 (most of California).

Shear walls receive lateral forces from the diaphragm above through the connections described above. As shown in Figure 2, lateral forces enter the shear wall along the double top plates. The lateral force acts to slide the wall in the direction in which the load is acting, and to lift simultaneously the left end of the wall shown in Figure 2.

To resist sliding, the shear wall bottom (sole) plate of an upper-story wall must be connected along its length with nails long enough to pass through the floor sheathing and to penetrate into the floor framing or blocking below. Shear walls framed on top of a foundation stem wall or concrete slab on grade must have the sill plate bolted to the foundation or slab (see Figure 3). Proper connection of the bottom plate of a shear wall is essential for good earthquake performance.

As described above, the lifting action at the end of a shear wall is a result of the horizontal force acting along the top plate attempting to tip the wall over (overturning force). While one end is being lifted, the other end is being pushed down, so the studs or post at the wall ends are alternately placed in tension or compression, depending on the direction in which the lateral load is applied. To resist the lifting action, shear walls often have anchor straps or brackets called hold-downs attached to the wall studs or posts at each end of the wall (see Figure 3). It is important that these anchors be located at the wall ends because their

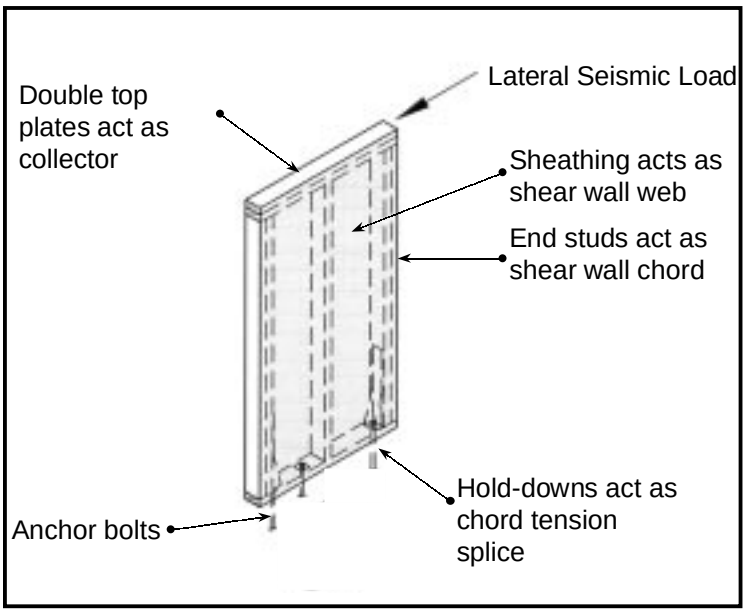

Figure 3 . Typical shear-wall elements.

location defines the length of the shear wall that can be used in the design of the components resisting lateral loads. In upper-story walls, hold-downs must extend through to, and attach to, the wall framing in the story below. Where a wall is not directly below it, the hold-down must attach to a floor beam or wall header to complete the load path leading to the foundation. When walls are framed on a foundation stem wall or slab, the hold-down anchor is embedded in the foundation (Figure 4).

Proper connection of the bottom plate of a shear wall is essential for good earthquake performance.

In addition to providing uplift restraint, hold-downs also limit the in-plane deflection of a shear wall and thereby contribute to its overall stiffness. A certain amount of deflection is expected when a shear wall absorbs earthquake forces, but too much deflection causes damage to other parts of the building that are sensitive to deflection, such as gypsum board or plaster finishes. Improper hold-down installation can result in vertical slip. Vertical movements at the base of the wall allow the top of the wall to deflect horizontally, with the amount of deflection dependent on the height-to-width ratio of the shear wall. If a 1/2-inch vertical slip occurs at the bottom corner of a shear wall that is four feet wide and eight feet tall, it will result in a one-inch horizontal movement at the top. This one-inch deflection is in addition to the horizontal deflection that is expected to occur based on the stiffness of the shear wall itself. Consequently, improper hold-down installation is an important source of earthquake damage. If a hold-down using bolts is incorrectly installed with oversized bolt holes through a wood end post, vertical slip or movement will occur at that location. Vertical slip can also occur if the nut is not tightened on the top end of the threaded rod from a hold-down into the foundation. Mis-alignment of hold-down anchor rods and kinks in steel straps also permit movement as they are straightened when placed in tension by uplift forces.

Occasionally, hold-downs may not be required. One situation occurs when the lateral loads are relatively small compared with the dead load supported by the wall or its end posts. The other situation is when a shear wall is very wide relative to its height. A wide shear wall has the center of its dead load located further from the end of the wall and this distance creates more leverage to resist the uplift at the ends. If the structural analysis shows that the dead load is large enough to resist the uplift

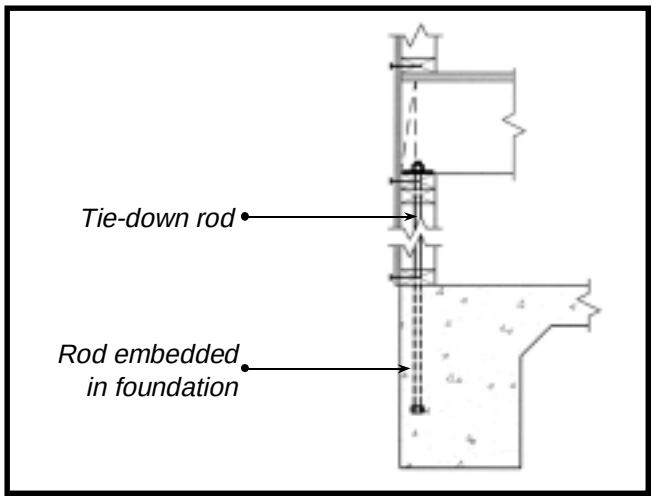

Figure 4 . Hold-down anchorage.

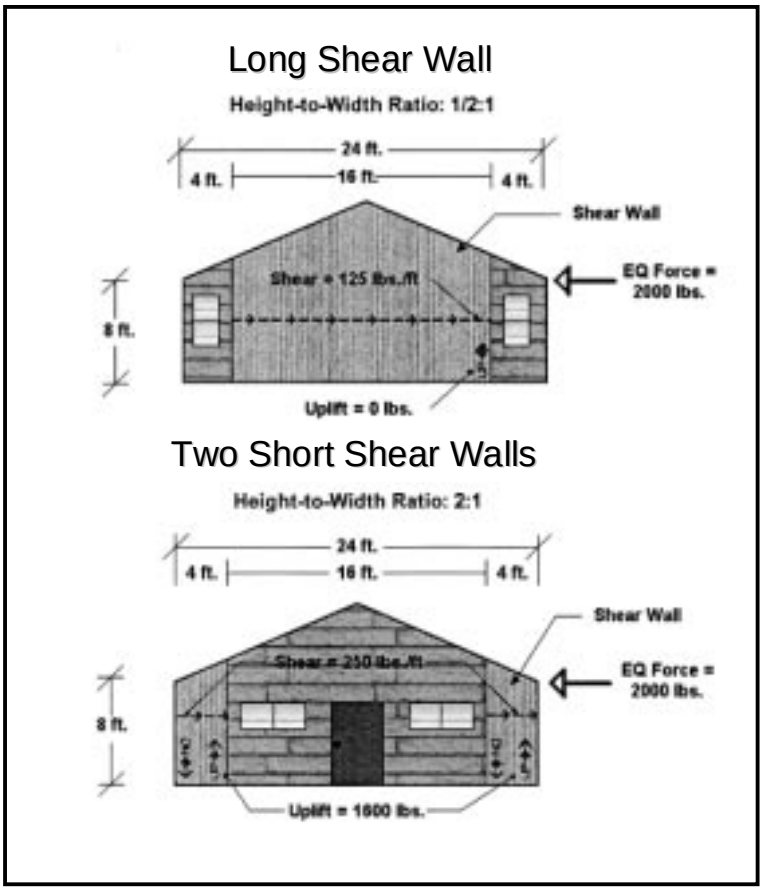

Figure 5 . Comparison of forces in shear walls of different length. There are no uplift forces in the 16-ft long shear wall at the top of the figure, whereas uplift forces at the corners of the 4-ft long shear walls in the lower figure (one wall at each end) equal 1800 pounds for the same lateral earthquake force and uniform deadload (200 lb/ft).

force at the end of the wall, a hold-down is not required. This concept is illustrated in Figure 5.

Reference

ICBO, 1997, *Uniform Building Code*, International Conference of Building Officials, Whttier, California.

About this Briefing Paper Series

Briefing papers in this series are concise, easy-to-read summary overviews of important issues and topics that facilitate the improvement of earthquake-resistant building design and construction quality.

This briefing paper was prepared by the ATC/SEAOC Joint Venture, a partnership of the Applied Technology Council (ATC) and the Structural Engineers Association of California (SEAOC). Funding for the series was provided by the California Seismic Safety Commission, Proposition 122 Retrofit Practices Improvement Program.

Copies of Briefing Papers can be downloaded from ATC's World Wide Web site (www.atcouncil.org), or are available from:

ATC/SEAOC Joint Venture
c/o Applied Technology Council
555 Twin Dolphin Drive, Suite 550
Redwood City, California 94065

Lesson W1:
The Load Path in Wood Frame Construction

The objective of this lesson is to provide introductory information to identify and explain the purpose of the major components of the earthquake load path in wood frame construction and to provide a basis for applying the information contained in Lesson W2 - Improving the Earthquake Performance of Wood Frame Construction. Lesson W2 contains six very detailed discussions on diaphragms, shear walls, interconnections, foundations, irregular buildings and design issues in buildings with concrete or masonry walls. Briefing Paper 3, *Seismic Response of Wood Frame Construction*, is another source of information on load path issues, as are each of the resources listed at the end of this lesson.

1.1 Introduction

An understanding of the lateral force resisting elements and the load path that interconnects them is vital to the proper design, plan review, inspection and construction of wood buildings. The lateral load path can be visualized as a chain, with each major element, component and interconnection serving as a link in the chain. The capacity of the weakest link will often determine the amount of damage that occurs during an earthquake. Therefore, a thorough understanding of the load path is essential for anyone who has responsibility for the earthquake performance of buildings.

The primary elements defining the load path in wood construction include roof diaphragms, floor diaphragms, shear walls, and frames, and the foundation system. Their purpose it to transmit earthquake forces generated by ground shaking effects on the building's mass from the uppermost level of the structure to the ground. Each of these elements contains specific load path components and interconnections necessary for them to function as part of the lateral force resisting system. The mechanics of how these elements perform their various functions in wood buildings are described below.

1.2 Diaphragms

Wood framed floor and roof assemblies are known as diaphragms. The diaphragm performs its function of transferring and distributing horizontal (lateral) forces, by acting like a horizontal beam spanning between supporting elements located at its ends as shown in Figure W1-1. The roof or floor sheathing forms the beam web, with the joists or rafters acting as web stiffeners, providing resistance to out-of-plane buckling, as well as providing support for splices in the sheathing. Along the edge or boundary of a diaphragm there are also other load path components called chords and collectors.

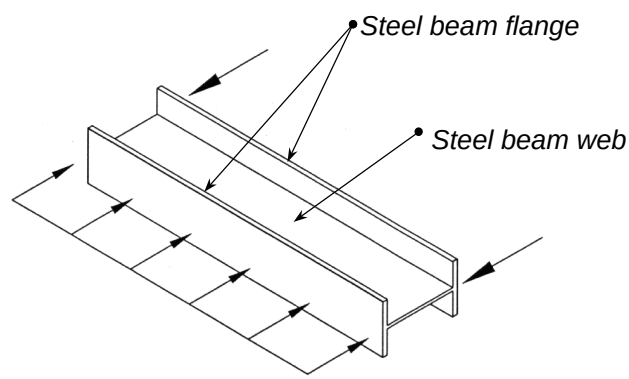

Figure W1-1 Diaphragms act like a Horizontal Steel Beam

Diaphragm chords are load path components occurring along edges perpendicular to the direction of the applied lateral force as shown in Figure W1-2. Horizontal forces bend the diaphragm horizontally just like vertical loads bend a floor beam or roof

beam vertically, and the bending creates either a tension or compression force in the chord member. The maximum tension or compression force will occur where the greatest bending stress occurs, usually at the mid-span between the diaphragm ends. The chord forces are also dependent on the shape of the diaphragm and the lateral loads it must resist in each direction. For example, in a building that is 100 feet long and only 25 feet wide, the diaphragm depth is four times its width (4:1). Assuming the tributary lateral loads to the diaphragm are equal for both directions, the maximum tension and compression forces in the chords along the 100-foot-long edges are 16 times greater than the forces in the chords along the short edges.

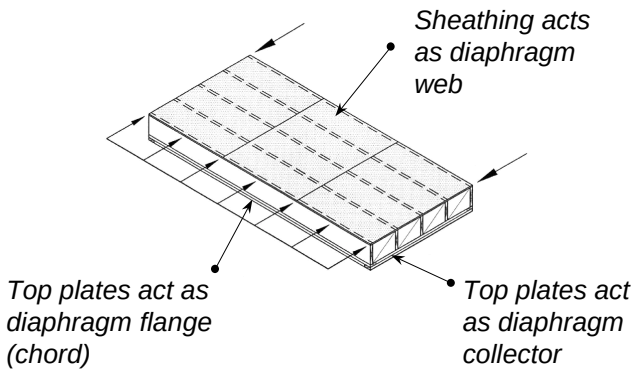

Figure W1-2 Diaphragm chord and collector members

In buildings with wood framed walls, the double tops plates usually serve as the diaphragm chords. Because tension occurs in chords, splices in top plates must be specifically designed or the chord will pull apart. In concrete or masonry wall buildings with a wood framed roof, steel reinforcing within the wall typically serves as the diaphragm chord and must also be properly spliced.

Diaphragm collectors, or drag strats, are another load path component in diaphragms that often occur along diaphragm boundary edges parallel to the direction of the applied lateral force, as shown in Figure W1-2. Collectors can be thought of as beam web stiffeners provided at the beam end reactions. Collectors transmit shear forces along their length and must resist axial tension and compression loads. Often a collector is also a conventional beam, a member that carries vertical dead and live loads from the floor or roof diaphragm.

Frames and shear walls are seldom continuous along a diaphragm boundary edge because of openings in the walls. In these situations the collector serves to collect forces along the diaphragm edge and deliver those forces into a shear wall or frame. Collectors are also known as drag struts. An example of a drag strut would be the member used to collect forces from a smaller diaphragm whose edge does not have a shear wall, and deliver the forces from it into the main diaphragm, where those forces are subsequently redistributed to the main diaphragm boundary edges. Collectors also occur in line with interior shear walls or frames to transmit forces from the diaphragm to those resisting elements. A collector's internal forces vary over its length, with the maximum axial force occurring where the collector connects to a shear wall or frame.

Along boundary edges, the member serving as the collector in one direction also often serves as a chord for forces in the perpendicular direction. In buildings with wood framed walls, the wall top plates usually perform both functions, making them vital to the performance of the diaphragm and the building's overall load path. Collectors and drag struts leading to interior walls or frames are usually a beam in the diaphragm framing that also carries vertical dead and live loads, in addition to the axial forces it transmits as a collector. In concrete and masonry wall buildings the collector can be the wood or steel ledger attached to the walls, or at interior locations it may be a large wood or steel beam in the floor diaphragm.

Wood diaphragm sheathing normally consists of wood structural panels (plywood or oriented strand board, OSB), while in older buildings it may be wood boards laid perpendicular or diagonally across the framing. The sheathing thickness and panel grade for structural panels, and the lumber thickness, species and grade for sheathing boards will effect the diaphragm capacity.

The final part of the diaphragm assembly, fastening, connects the sheathing to the rafters, joists, chords and collectors. Fastening is a critical part of a diaphragm's ability to transmit shear forces caused by lateral loads. Fastener diameter, depth of penetration into the framing below, and spacing along edges of the individual sheathing panels are factors that determine a diaphragm's capacity. However, the layout of the sheathing panels and the presence or absence of blocking along all edges of sheathing will also significantly effect the capacity. Where very close spacing of fasteners are used to obtain larger capacity, the thickness (width) of the framing member at abutting panel edges where two rows of fasteners occur, must be sufficient to prevent splitting of the wood framing.

Openings through diaphragms occur where duct shafts, stairs and skylights are located. These openings can interrupt the flow of forces through the diaphragm, and where large enough, will require special straps along their edges to complete the load path and transfer forces around the opening. A stair or other opening located along a diaphragm boundary edge can sometimes interrupt a collector or chord member and may need special details to complete the load path across the opening.

1.3 Wood Framed Shear Walls

This discussion of shear walls is limited to those using wood structural panel sheathing over wood studs. Other types of sheathing materials are allowed by the code to resist earthquake forces, and steel stud framing is also an alternative, but these are not within the scope of this lesson. Sheathed stud wall assemblies serve as braced walls or shear walls in wood buildings.

The shear wall assembly can also be envisioned as a vertical cantilever beam as shown in Figure W1-3 with the wall sheathing forming the beam web. Posts or multiple studs at each end of the shear wall act as shear wall chords, resisting tension and compression forces. The double top plates of shear walls, also serving as diaphragm collectors, introduce the lateral forces into the shear wall. See Figure W1-4.

Collectors can also occur within a shear wall when, for example, a change in roof elevation results in discontinuous shear wall top plates. The lower height wall's top plates must connect into the taller wall framing to complete the load path.

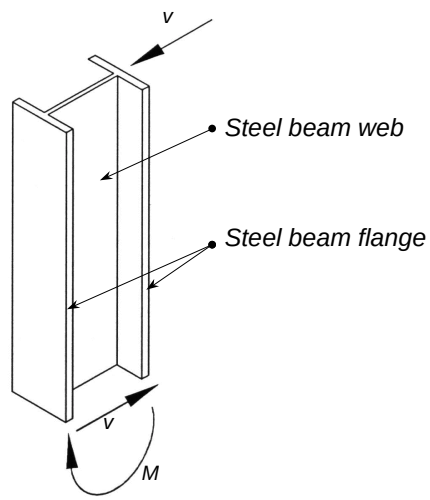

Figure W1-3 Shear walls act like a vertical cantilever steel beam

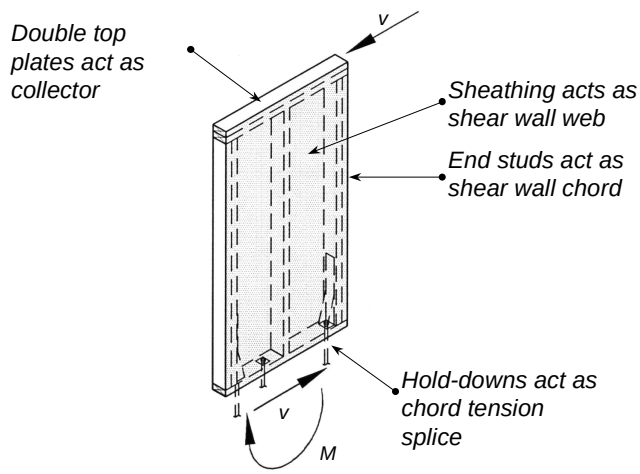

Figure W1-4 Shear Wall Chord and Collectors

The purpose of shear walls is to provide both the strength and stiffness necessary to resist lateral loads from the diaphragm above and transmit those loads through the wall into either: 1) a shear wall in the story below, 2) the diaphragm below, or 3) the building foundation. In addition to resisting

lateral loads, shear walls often carry vertical loads from roof and floors above. However, it is important to understand that a bearing wall is not always a shear wall. An exterior bearing wall may sheathed on its exterior face and look just like a shear wall, but it may not be capable of resisting earthquake forces. In engineered buildings, only those walls properly connected to the diaphragm and provided with adequate resistance to sliding and uplift forces can qualify as shear walls.

Wood framed shear walls consist of double top plates, studs, and sole or sill plates sheathed with wood structural panels on one or both sides. The sheathing and its attachment perform the same function as in a horizontal diaphragm to resist lateral loads in the plane of the wall. A shear wall's strength capacity depends on the sheathing grade and thickness, and the fastener size and spacing. However, the stiffness rather than the strength of a shear wall, is the true measure of its ability to control damage from earthquakes. A shear wall is essentially a cantilever, fixed at its base but able to move laterally at the top. The amount of deflection that occurs at the top is dependent on the shear wall's stiffness. Stiffness, or the ability to resist deflection, is a function of the wall's in-plane shear strength, uplift resistance capacity, and its height to width ratio. Comparing two identically constructed shear walls of equal height and resisting the same lateral force, a narrower wall will have more deflection. This is one reason that the 1997 *Uniform Building Code* (UBC) reduced the maximum height to width ratio of shear walls from 3-1/2 :1 to 2:1 for buildings located in Seismic Zone 4, as defined by the UBC. Other factors that also determine how much deflection will occur in the shear wall include the potential slip that can occur in connections located at the ends of the wall, called hold-downs.

The lateral in-plane force which shear walls resist will attempt to slide the wall in the direction the load is acting, and also lift the end of the wall where the load is being applied. To resist sliding, the shear wall bottom (sole) plate of upper story walls must be connected along its length with a sufficient number of nails that are long enough to penetrate the floor sheathing and penetrate into the floor framing or blocking below. Shear walls framed on top of a foundation stem wall or concrete slab on grade must have their sill plate bolted to the foundation or slab. Proper connection of the bottom plate of a shear wall is essential for good earthquake performance.

The lifting action on the end of a shear wall is a result of the horizontal force acting along the top plate attempting to tip the wall over. When one end is being lifted the other end is being pushed down, so the studs or post chords at the wall ends will alternately be placed in tension or compression depending on the direction in which the lateral load is applied. To resist the lifting action force, shear walls often have anchor straps or brackets called hold-downs attached to the wall studs or posts at each end of the wall.

At upper story walls, hold-downs must extend and attach to the wall framing in the story below, or where a wall does not occur directly below, they must attach to a floor beam or wall header to complete their load path leading to the foundation. Walls framed on a foundation stem wall or slab will have the hold-down anchor embedded into the foundation. Occasionally, when the lateral loads are relatively small and the dead load supported by the wall or its end posts are particularly large, a hold-down may not be required.

In addition to providing uplift restraint, hold-downs also limit the in-plane deflection of a shear wall and thereby contribute to its overall stiffness. A certain amount of deflection is expected when a shear wall is resisting earthquake forces, but too much deflection will cause damage to other parts of the building that are sensitive to deflections, such as gypsum board or plaster finishes. If a hold-down using bolts is incorrectly installed with oversized bolt holes through a wood end post, a vertical slip or movement will occur at that location. Similarly, if the nut is not tightened on the top end of the threaded rod from a hold-down into the foundation this will allow a vertical slip to occur. This vertical slip allows the top of the wall to deflect horizontally, with the amount of deflection dependent on the height-to-width ratio of the shear wall. If a 1/2 inch vertical slip occurs at the bottom corner of a shear wall that is 4 feet wide and 8 feet tall, it will result in a 1 inch horizontal movement at the top. This movement will be in addition to the horizontal deflection that is expected to occur based on the stiffness of the shear wall itself. Consequently, improper hold-down installation is often a source of earthquake damage.

1.4 Load Path Connections

The diaphragm and shear wall elements alone are not adequate to resist seismic forces without proper interconnection and connection to the foundation. Figure W1-5 shows the load path in a typical wood frame building connecting the locations where seismic forces are generated in the building to the resistance provided by the ground surrounding the foundation.

The load path depicted in Figure W1-5 and the necessary connections can be described as follows:

1. Seismic forces are generated in the roof diaphragm in proportion to the weight of the roof, ceiling and the upper half of the top story walls tributary to the roof diaphragm. These forces are resisted by shear walls in the top story that are parallel to the forces acting on the diaphragm.
2. The roof diaphragm must be connected to the top plates of the top story wall to transfer the forces from the diaphragm into the shear wall. To accomplish this the roof sheathing must be fastened to blocking or end rafters occurring over and in line with the shear wall. The

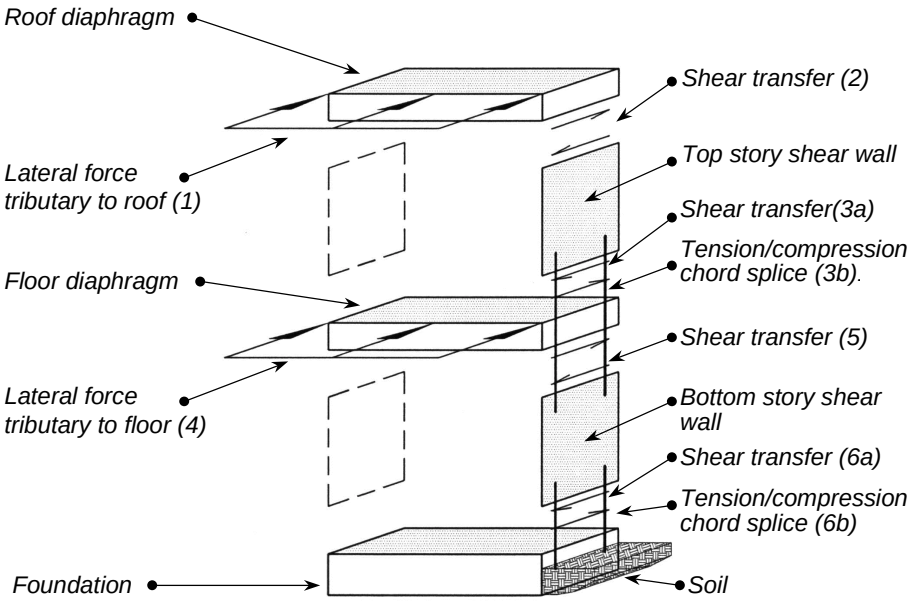

Figure W1-5 Load path in a typical wood shear wall building. Notes corresponding to numbers in parentheses are provided in text

blocking or end rafter must be fastened

to the shear wall top plate, and any collector beam along that line must also be connected to the shear wall top plate.

3. The lateral force in the top story shear wall is transferred out of that wall, and into the shear wall in the bottom story. Two types of forces are transferred.

3a. In-plane shear forces from the top story wall are transferred from that wall's sole plate into blocking or a floor joist, and then transferred from the blocking or floor joist to the top plate of the bottom story shear wall.

3b. Shear wall chord tension and compression forces due to shear wall overturning are transferred by connecting the shear wall end studs or post (chord) in the wall above, to a post or studs in the wall below, or to a floor beam or header if a wall does not occur below.

4. Lateral forces tributary to the floor diaphragm are generated by the weight of the diaphragm and the walls halfway above and below that floor. These forces are resisted by shear walls in the bottom story that are parallel to the forces acting on the floor diaphragm.

5. Shear from the floor diaphragm lateral force, item 4 and the top story shear wall force, item 3a are combined and transferred into the bottom story wall. The floor diaphragm force is transferred as described in item 2 and the wall force by the methods described in item 3a above.

6. The force transferred into the bottom story shear wall in item 5, is transferred out of that wall and into the foundation. The foundation in Figure W1-5 assumes a slab on grade rather than a raised floor with a cripple wall. Again, two types of forces must be transferred.

6a. Shear transfer from the bottom story wall occurs through bolts connecting the wall sill plate to the foundation.

6b. Shear wall chord tension and compression forces due to shear wall overturning are transferred by connecting the shear wall end stud or post to the foundation with hold-down anchors.

Additional information regarding the load path in wood frame buildings can be found in the publications listed below.

1.5 Resources

ATC, 1976, *A Methodology for Seismic Design and Construction of Single-Family Dwellings*, Applied Technology Report ATC-4, Redwood City, California.

ATC, 1980, *The Home Builders Guide for Earthquake Design*, Applied Technology Report ATC-4-1, Redwood City, California.

APA, 1997, *Building in High Wind and Seismic Zones*, The Engineered Wood Association.

Breyer, D.E., 1993, *Design of Wood Structures*, 3rd Edition, McGraw-Hill, Inc., New York, New York.

FEMA, 1998, *Seismic Retrofit Training for Contractors and Inspectors*, Federal Emergency Management Agency, Emergency Management Institute, Emmitsburg, Maryland.

ICBO, 1998, *Load Path and Continuity in "Engineered" Wood-Framed Buildings*, International Conference of Building Officials, Whittier, California.

SEAOC, 1997, *Seismic Detailing Examples for Engineered Light-Frame Timber Construction*, Structural Engineers Association of California, Sacramento, California.

SEAOC, 1997, *Guidelines for Diaphragms and Shear Walls*, Structural Engineers Association of California, Sacramento, California.

SOHA, 1998, *Home-Builders Guide to Seismic Resistant Construction*, prepared by SOHA Engineers, San Francisco, Published by the Federal Emergency Management Agency, FEMA Report 232,Washington, D.C.

Lesson W2:
Improving the Earthquake Performance of Wood Frame Construction

The objective of this lesson is to provide details for the improvement of the earthquake performance of diaphragms, shear wall connections, and foundations. Specific considerations are given to irregular configurations and design issues where buildings have concrete or masonry walls.

2.1 Diaphragms

The objective of this section is to enable designers, plan reviewers and inspectors to understand the earthquake resistive properties of wood frame diaphragms, to show how diaphragms should be properly designed and constructed, and to provide guidance on new code provisions applicable to wood diaphragms.

2.1.1 Sheathing Materials, Typical Layout and Fastening

Issues and Concerns. Attention to the proper materials, layout, and fastening of diaphragm sheathing is needed. The required fastening and layout must be clearly specified and shown on the drawings to ensure the construction will be adequate to resist earthquakes.

A. Discussion and Examples:

Sheathing and Layout

This section uses the terms panel or sheathing when discussing diaphragm sheathing consisting of wood structural panels. There are, however, three different products that qualify as wood structural panels. They include all-veneer plywood, oriented strand board (OSB), and waferboard. These panel products are regulated by UBC Standards 23-2 and 23-3 published by the International Conference of Building Officials (ICBO), as well as *Voluntary Product Standards* PS1-83 and PS2-92 published by APA-The Engineered Wood Association. All sheathing panels are required to be marked with a grade stamp, indicating the manufacturer, the panel grade, the span rating, the thickness, the exposure durability classification, and the applicable manufacturing standards. Further information on grading stamps can be obtained from APA-The Engineered Wood Association, and in the ICBO video series.

The building designer may specify the use of all veneer plywood exclusively, OSB exclusively, or specify that either may be used at the contractors preference. While recognized as equivalent by the code, these materials do have different characteristics which may lead a building designer to specify one or the other.

Sheathing layout includes a number of considerations, including:

- the size of sheathing pieces,
- the orientation of the panel face grain with respect to the framing members,
- offsets in panel joints in adjacent rows of panels,
- the use of panel edge blocking,
- the use of 3x framing members at abutting panel joints.

As shown in Figure W2-1, diaphragm sheathing should be laid out in full size panels. Because building dimensions often require that smaller sheets be used at diaphragm ends or edges, the code limits minimum sheet size to 24 inches without

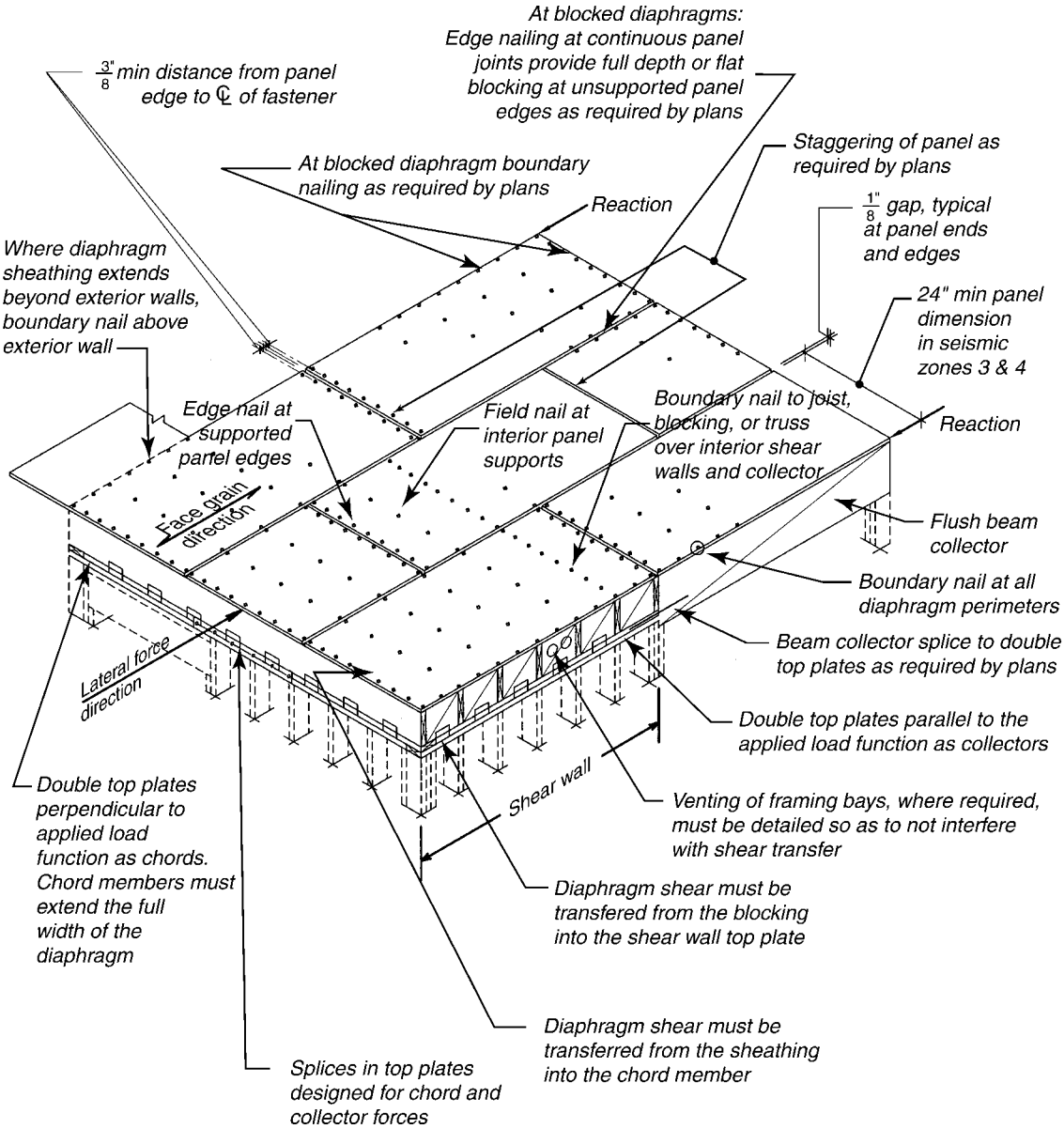

Figure W2-1 Typical diaphragms

blocking. Sheet size may be less than 24 inches if all edges are supported by blocking, however, more restrictive minimum panel dimensions may be specified in the construction documents. The face grain of plywood or OSB panels is in the long direction. When the panel has been cut so that the long direction is no longer obvious, the direction needs to be determined by observation of the face grain. Normally the face grain of the panel is oriented perpendicular to the framing members.

The building designer selects a sheathing layout from UBC Table 23-II-H as part of the design process. The layout selected will specify a panel layout with respect to the framing member direction, and any staggering of panel end joints between adjacent rows. The resulting layout should be clearly shown on the drawings,

preferably on the framing plans. The diaphragm shear capacity required to resist lateral loading will also determine whether blocking is required at panel edges not supported on framing. When blocking is needed, its specific requirements should also be very clearly called out on the drawings.

Use of flat 2x blocking in lieu of full depth blocking is generally considered acceptable for diaphragms using nails smaller than 10d common diameter. A 10d common nail requires at least 1-3/4 inches of penetration (12 times its diameter) into the framing to fully develop the nail capacity. Therefore, 2x flat blocking (1-1/2 inch actual thickness) is not sufficient for this very commonly specified diaphragm nail size. For blocking installed vertically, 3x width blocking is required where a nail spacing of either 2 or 2-1/2 inches is used, and where 10d nails that penetrate the framing more than 1-5/8 inches are used at 3 inch spacing. As noted above, 10d common nails must penetrate the framing at least 1-3/4 inches to obtain full capacity. Therefore where 10d common nails are specified at 3 inch spacing, the framing or blocking must be 3x minimum width.

Sheathing installation typically provides a 1/8-inch gap between panels. This allows panel expansion caused by either temperature or moisture to occur. Omitting this expansion gap can result in damage to panel edges or loosening of field nails, as the centers of the panels try to bow outward from the framing.

Fastening

The diaphragm fastener type most often specified on drawings is a common wire nail. Common nails or hot-dipped galvanized box nails of the same diameter are the basis for the allowable shear values in UBC Table 23-II-H. Field substitution of sinker nails or regular box nails for common nails will significantly reduce a diaphragm's capacity. The use of incorrect nails in diaphragm construction occurs far too often. Either engineers need to realize that nail substitutions are routinely occurring and actually base their design on the lower values of the sinker nails, or inspectors need to begin stopping jobs and requiring total removal of improperly nailed diaphragm sheathing. This is a major construction quality issue with the potential to result in significant earthquake damage. Successfully addressing this issue will require the cooperation of both designers and code enforcement personnel.

There are several classifications of fastening that are primarily defined by their location in the diaphragm and depend on the layout of the sheathing and the use or absence of blocking at all panel edges. These include boundary, edge and field fastening. The following fastening rules apply to fully or partially blocked diaphragms:

- As shown in Figure W2-1, "boundary fastening" occurs along chord and collector members that define the perimeter of an individual diaphragm. It is important to understand that the diaphragm boundary location is NOT always the edge of the diaphragm sheathing. For example, where interior shear walls divide the floor or roof into two or more smaller diaphragms, boundary fastening must occur along the perimeter of each diaphragm. This will include over the interior shear wall and any collector occurring on that wall line. At roof and floor overhangs the diaphragm boundary is along the line of the wall framing below, instead of along the perimeter edge of the sheathing.
- In blocked diaphragms, edge fastening at "continuous panel joints" must equal the boundary fastening when there is no panel edge stagger in the direction of the applied lateral load (UBC framing layouts 3, 4, 5, or 6 as shown in Figure W2-2).
- Edge fastening at "other" panel edges occurs along all the other panel edges of blocked diaphragms that are not described above.
- Field fastening occurs at all interior panel supports. For nailed diaphragms the required nail spacing is 12 inches on center.

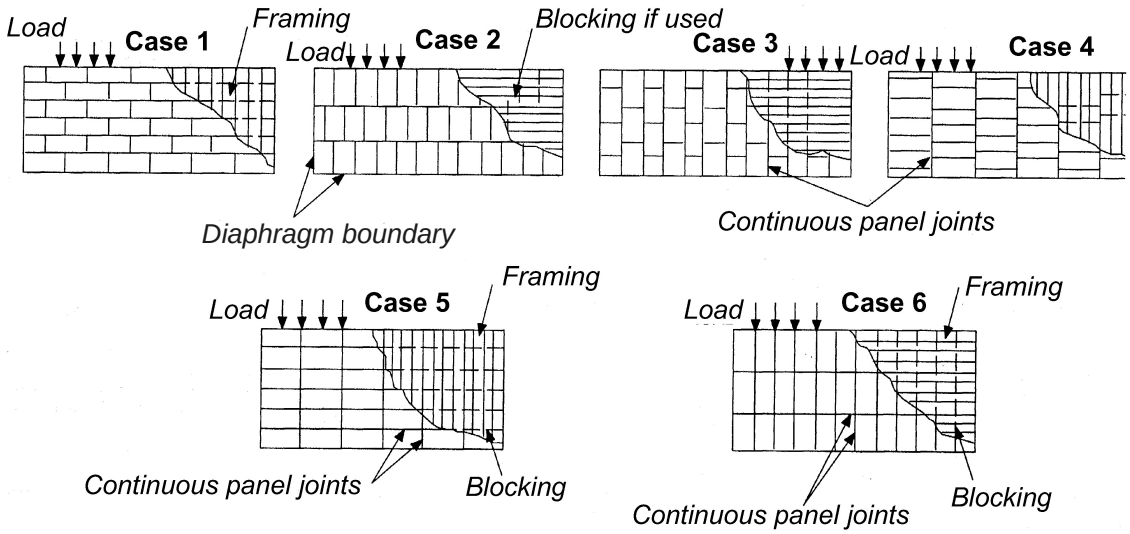

Figure W2-2 UBC Sheathing layout patterns

The following fastening rules apply to unblocked diaphragms:

- Edge fastening at all diaphragm perimeter edges and along all shear walls or collectors. Edge fastening of all supported panel edges.
- Field fastening at all other panel supports.

There are some details of fasteners and installation which are known to have an adverse effect on the resulting diaphragm capacity. Some considerations are:

- The type of fastener. Code diaphragm capacity tables specify the use of common wire nails or hot-dipped galvanized box nails. Equivalent designations of nails (i.e., 10 penny, 10d) in non-galvanized box or sinker types have different shaft diameters and lengths. The shear capacity of a nail is proportional to the shaft diameter, so box or sinker nails with smaller shaft diameters have less capacity.
- Overdriving of fasteners. Nails are acceptable when the top face of the nail head is driven flush with the face of the sheathing. When the top face of the nail head is driven more than 1/32 inch below the face of the sheathing, the nail is considered overdriven. (See Figure W2-3). Overdriving has been observed, in testing, to create significant

Nails shall be considered overdriven when the top of the head of the nail is more than 1/32" below the face of sheathing

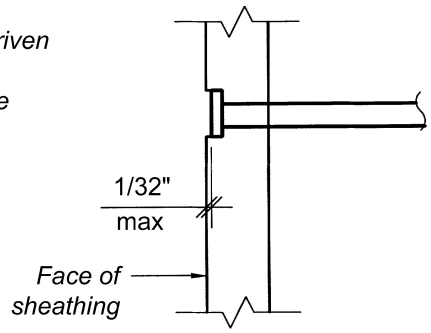

Figure W2-3 Overdriven nail

reductions in the capacity of shear walls. It is expected that the effect on diaphragm capacity would be very similar.

- Inadequate edge distance. The minimum required distance from the center of a fastener to the edge of the sheathing panel is 3/8 inch. A common mode of failure observed in both testing and actual earthquakes is the tearing of the fastener through the edge of the panel. Therefore, inadequate edge distance will reduce the capacity of the diaphragm.
- Fasteners that split or protrude from the framing. Fasteners that protrude from the framing are commonly called shiners. Both shiners and split framing result in inadequate gripping of the nail by the framing, so that the nail capacity is essentially lost. When entire rows of nailing result in splits or shiners, the diaphragm capacity will be close to zero in that area.

Accurate placement of the panel edge with respect to the framing below is important because it will affect the installation of fasteners. The typical layout involves two panel edges butting over a 2x floor joist or roof rafter which is 1-1/2 inches wide. As previously mentioned, it is desirable to leave a 1/8 inch gap between the panels for expansion. It is also desirable that there be a 3/8 inch distance from the fastener center line to framing member edge. In addition, it is required that a minimum 3/8 inch distance be provided from the fastener center line to the sheathing panel edge. The total of these dimensions adds up to 1-5/8 inch, which is wider than a nominal 2x framing member, and makes it clear that there really is no dimensional allowance for less than perfect construction. It is possible to make this configuration work by reducing the dimension from the fastener to the edge of the framing member, and sometimes sheathing fasteners are driven at a slight angle to prevent shiners from resulting. However, unless the angle is kept to a minimum, this practice can lead to overdriven nails.

The species or treatment of the framing into which the sheathing fastener is being driven can effect the diaphragm capacity. Existing buildings may have framing of a species other than Douglas fir-Larch. In northern California through the 1950's it was fairly common for buildings to be framed entirely of redwood. In these cases the sheathing fasteners connecting into redwood are subject to capacity reductions in accordance with Footnote 1 of UBC Table 23-II-H. Capacity reductions for other species, such as Hem-fir, are also necessary. Reductions are not required for fastening into pressure treated members, but are necessary for fire-retardant treated members and sheathing. The reductions applicable to fire-retardant treatment must be obtained from specific product manufacturer.

Connections, other than sheathing fasteners, are often part of the load path between the sheathing and the chord or collector. This commonly occurs in building with wood frame walls where a double top plate is serving as a chord or collector member. In this case the sheathing is fastened to a rim joist or blocking, which must in turn be fastened to the double top plate to complete the load path. The connection of the rim joist to the double top plate may use toe nails only when the design shear load is 150 pounds per linear foot or less. For larger loads this connection will typically use a light gage steel framing clip, available from a variety of manufacturers. When this or similar connections are made using nails, it is important that the fastener type specified by the framing clip manufacturer is the one actually used in the field, so that the necessary capacity will be provided. Observation of construction indicates that framing contractors favor the use of vinyl coated sinkers for wood framing connections. If sinker nails are very likely to be installed, designers should be adjusting the required quantities or spacing of fasteners in these types of connections for the smaller capacity the sinker nails provides, because inspection of these types of connections cannot easily determine the type of nail used.

B. Resolution of Issues Relating to Sheathing Materials, Layout, and Fastening

For Designers

Make certain that the drawings clearly show how the sheathing panel layout is to be installed, particularly where changes in framing direction occur. If the intended sheathing stagger of joints is not installed, the diaphragm can have significantly less capacity than was intended.

Provide clear instructions regarding where blocking is required, and whether blocking can be installed flat, and specify the minimum unblocked dimension.

Specify boundary nailing locations by grid line if possible, and specify the locations where 3x or wider framing is required on the framing plans. Where close spacing of edge fastening is required to obtain high capacity, and staggering or multiple rows of fasteners must be used, provide a typical plan detail of fastener layout along those panel joints.

If common nails are the basis for the design indicate that "No Nail Substitutions are Permitted", or provide an alternative fastener schedule in anticipation of the actual type and diameter of nails that will be used.

Provide typical shear-transfer details and any special shear-transfer details that will occur between diaphragms and vertical resisting elements.

For Plan Check Engineers

Verify that layout of the sheathing shown or specified on the drawings matches the design capacity assumed for the diaphragm.

Verify the locations where 3x minimum framing and blocking is required by the diaphragm capacity or fastener spacing and confirm that these are clearly noted.

Check that the adequate transfer of shear between the diaphragm and the vertical resisting elements has been detailed and documented by calculation.

For Inspectors

Verify the sheathing grade and thickness, fastener type, size (diameter and length) and spacing that is called for on the plans, has actually been installed. If any substitutions are found, require the engineer to confirm the capacity is still sufficient prior to approval. Require additional fasteners to be installed where fastener spacing is consistently too far apart.

Check for overdriven nails or insufficient edge distance from the nails to the panel edges, and require supplemental fastening when the required spacing is 4 inches on center or greater. If the fastener spacing is closer than 4 inches on center, require removal and replacement of the sheathing and replacement of any 2x framing below to avoid splitting those members upon re-fastening of the new sheathing.

Observe from below to locate shiners or split framing and require re-fastening of locations with shiners and replacement of damaged framing. Observe from below to verify 3x framing and blocking is installed at those sheathing edges required by the drawings.

Observe shear transfer connections along top plates of shear walls to verify the required hardware type, size and spacing conform to the drawings. Check that all nail holes in sheet metal connectors are filled with the proper size nails.

2.1.2 Locations of High Stresses in Diaphragms

Issues and Concerns. Special attention and detailing is needed to building configurations that result in areas with high shear stress in the diaphragm. Special details should be provided at large openings in diaphragms. Diaphragms in buildings with concrete and masonry walls may need several different zones of nailing.

A. Discussion and Examples

Diaphragm stresses generally remain low where distances between shear walls are small and the building geometry is regular.

Some of the conditions that tend to create high stresses in diaphragms include:

- When wood diaphragms are used in buildings with concrete or masonry walls, the diaphragm stresses throughout the diaphragm will be much higher than for buildings with wood framed walls. Because of the high stresses, these buildings are likely to have multiple zones of diaphragm nailing. Design considerations for diaphragms in these buildings is discussed in greater detail in Section 2.6.
- When the diaphragm depth to width ratio (greatest to least plan dimensions between shear walls) is greater than 2:1 high stresses will occur in both the diaphragm and its chords. For example when a building is only 25 feet wide at the street front, but extends 100 feet deep, the diaphragm ratio is 4:1. High shear stresses will result along the 25 foot long edges and high chord forces will result along the 100 foot edges. A 4:1 ratio is the maximum permitted by the code.
- When one or more shear walls at upper floors do not continue to the foundation, the diaphragm must absorb and re-distribute the shear wall loads. In this case the shear at the base of a discontinued shear wall needs to be transferred into the diaphragm and then from that part of the diaphragm to another part where a shear wall does occur below. The portion of the diaphragm between the shear wall above and the shear wall below may have very high stresses. This sometimes leads to blocking being required in this limited portion of the diaphragm, in what otherwise could be an unblocked diaphragm design.
- When a floor diaphragm has an opening that extends a significant portion of the diaphragm length or width. Openings with a dimension of about ten percent or less of the diaphragm width generally have only a nominal impact on the diaphragm stresses. As openings get larger than this they create notable increases in diaphragm shears, and a design for the opening boundary elements may be necessary.

Areas of high diaphragm stress need special attention because they often result in a variety of special requirements including blocking of panel edges and very closely spaced panel edge and diaphragm boundary fastening. In some cases, high load diaphragms with multiple rows of fasteners may be required. These will be discussed in the next section. In general, when the diaphragm stresses are high, the demands on the chords and collectors are also high, and special detailing of those elements is also usually needed.

B. Resolution of Issues Relating to High Stresses in Diaphragms

For Designers

Building geometry (e.g., diaphragm depth to width, re-entrant corners, etc.), large openings in diaphragms especially along exterior walls, and tall concrete or masonry walls, often result in high diaphragm shear stresses, requiring designs to use a special panel grade (Structural I), multiple rows of fasteners, and multiple zones, each with different boundary and edge fastener spacing requirements.

For complex diaphragm layouts with multiple zones, or when boundary edges are not parallel to other main framing directions, the intended diaphragm construction details must be clearly shown and explained on the drawings.

Shear walls that are not continuous between stories must have their shear and overturning forces accounted for in the deign and detailing of the diaphragm, and its framing members used to resist and transmit those forces

For Plan Check Engineers

Review the diaphragm shear calculations and verify the drawings match the calculations regarding location of zones of

different capacity and the different fastener spacing that may be used in each zone.

Compare the architectural and and structural plans for opening locations and sizes. Verify that large openings have chords and edge nailing adequate to distribute shear from the interior side of the diaphragm, across the opening to the boundary side of the diaphragm.

Identify discontinuous shear wall locations and verify a design and detailing for transfer of the shear wall forces into and through the diaphragm has been provided.

For Inspectors

Carefully review the framing plans to determine the location and extent of diaphragm zones with different fastener spacing requirements and for fastener patterns where multiple rows of fasteners are used.

Review plans and details for special sheathing fastening, added straps and other diaphragm details particularly along the edges of large openings for stairs, skylights and elevator shafts.

Observe the diaphragm framing from below where a shear wall in a story above does not continue into the story below. Look for blocking in the floor along the line of the shear wall and for proper termination of hold-downs from the wall above to floor framing members.

Where diaphragms have a large depth compared to its width (long narrow building) look for special splicing of chord members (wall top plates) along the long side walls.

2.1.3 Special Fastening Requirements

Issues and Concerns. There are a variety of fasteners other than common wire nails that may be used for diaphragm fastening. There are special requirements and concerns which need to be considered when using alternate fasteners.

A. Discussion and Examples

Alternative Fasteners

While common wire nails are by far the most commonly specified sheathing fastener, they do not appear to be the most commonly used in construction. In current construction, most sheathing is fastened with some type of pneumatically driven (gun) nail. Gun nails are not always equivalent diameter to a common nail and in addition may have a clipped head instead of a full round head. Capacities for the pneumatic nails are often taken from evaluation reports by ICBO Evaluation Services (ICBO-ES) or National Evaluation Services (NES). Use of these fasteners is only permitted if accepted by the building official. Nail substitutions by a contractor should not be permitted without the concurrence of both the designer and the local code enforcement authority.

Wood screws and staples are occasionally used as sheathing fasteners. Information on stapled shear walls and diaphragms is available in APA Reports 138 and 154, as well as ICBO-ES and NES reports. Staples are favored by some designers for retrofit projects where sheathing is fastened into existing framing, because stapling tends to reduce splitting of the dry framing. As shown in Figure W2-4, staple crowns must be installed perpendicular to the sheathing face grain and a minimum crown width of approximately 7/16 inch should be used for diaphragm and shear wall fastening. See the evaluation reports for other requirements. APA recommends that the penetration of staples into shear wall framing be increased beyond the minimum required by evaluation reports in order to avoid staple pull out as the primary failure mode. See APA Report 154.

Some very limited testing has been performed on use of wood screws to fasten sheathing to wood framing. One test used commonly available cut-thread wood screws where the transition from the solid shank portion of the shaft to the threads occurred at the back face of the sheathing, which is common for screws with a diameter similar to 8d or 10d nails. This configuration

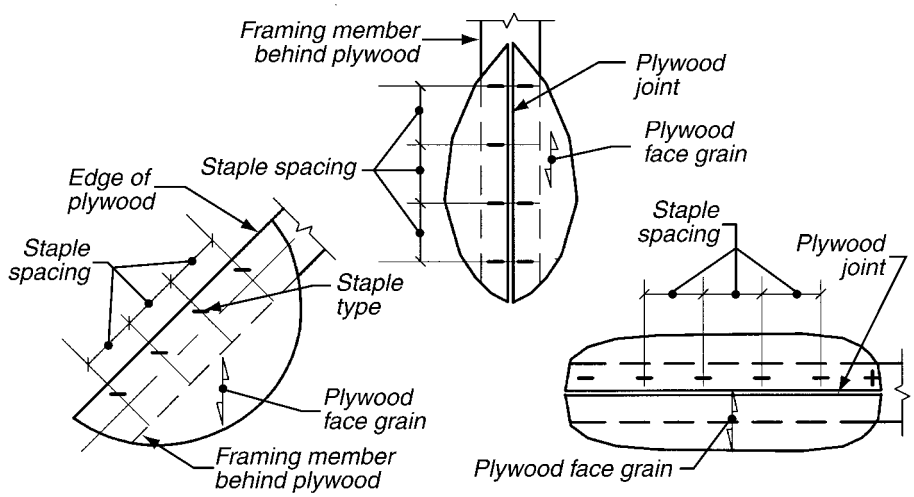

Notes: 1. Measure staple spacing parallel to edge of plywood.
2. Crown of staple to be perpendicular to direction of plywood face grain.
3. See general notes for staple type.

Figure W2-4 Staple fastener layout

exhibited very little ability to withstand cycled loading. It is recommended that the total screw length be increased so that the screw thread to solid shank transition occurs well inside the stud member. Behavior of sheathing attached using rolled-thread screws is currently not available, however, and there are legitimate concerns regarding the ductility of screws in these applications. Values for diaphragms or shear walls using screws are generally developed by the building designer, based on principles of mechanics.

Gluing of sheathing to the framing in lieu of nailing is another possible approach to fastening. This approach is discouraged because testing on shear walls has shown it to result in a very stiff and brittle system, where a ductile system with energy dissipation capacity is preferred. The NEHRP *Recommended Provisions for Seismic Regulations for New Buildings and other Structures* (BSSC, 1997) prohibit the use of adhesive systems for shear walls, and the Structural Engineers Association of California (SEAOC) "Blue book" (SEAOC, 1996) recommends against its use. This does not mean that floor sheathing cannot be glued in addition to being nailed to prevent squeaking, but the use of adhesives as the primary fastener is highly questionable.

In some seismic retrofit projects new sheathing is applied over existing wood structural panel sheathing, but more commonly wood structural panels are installed over existing board sheathing that is applied straight or diagonally to the framing. APA Report 138 provides an approach to applying sheathing over existing wood structural panels. The *Uniform Code for Building Conservation* (UCBC) Appendix Chapter 1, published by ICBO, provides allowable values commonly used the seismic shear capacity of diaphragms with panel sheathing applied over existing board sheathing. Where new sheathing is being applied over existing, it is important that the diaphragm boundary nailing receive proper penetration into the existing framing below. This may require special fastener sizes or lengths and definitely will require that existing framing below be accurately located prior to nailing. Pre-drilling for nails may also be necessary to prevent splitting of older dry lumber framing. This

problem may result in the selection of staples for the new sheathing's attachment.

Close Fastener Spacing and Multiple Rows of Fasteners

Whenever the member receiving fasteners is wide enough, sheathing fastening should be spread out or staggered across the available nailing surface, but still maintain the minimum fastener panel edge distance. This technique can minimize the splitting of the framing members, and can also help to avoid stress concentrations in the sheathing panel. As fastener spacing gets close at edges and boundaries, and wider framing members are required, the fastening should be divided into two or more rows. Where more than one row of fastening is specified, there should be a detail provided showing the intended spacing between rows and staggering pattern of fasteners between adjacent rows, similar to Figure W2-5.

ICBO-ES Report 1952, based on APA testing, contains special high-load diaphragms which use up to three rows of nails or staples for panel edge nailing. Report 1952 contains specific requirements for framing and blocking member sizes, spacing between rows of fasteners and staggering of fasteners between rows. The fastener spacing called for in this report is so close that the evaluation report calls for special inspection to be provided. However, very special attention by all parties involved is necessary to achieve the proper fastening, given the very small tolerances for errors when placing multiple rows of closely spaced fasteners.

B. Resolution of Issues Relating to Special Fastening Requirements

For Designers

Whenever alternates to nails are used in a design, the specific limitations of the alternative fasteners must be considered. Submittal of Evaluation Reports or testing data to the local building department will be necessary to document the design capacities.

If screws are used for sheathing attachment, their length should be specified and be long enough to avoid the location of the screw shank to thread transition from occurring at or above the sheathing to framing interface.

Staples as a sheathing fastener may be a good choice in seismic retrofit work, where existing framing lumber is very dry and easily splits. Otherwise, it will likely be necessary to specify pre-drilling for nails.

Provide details of layouts of multiple rows of fasteners along panel edges on the drawings to ensure the design is properly executed in the field.

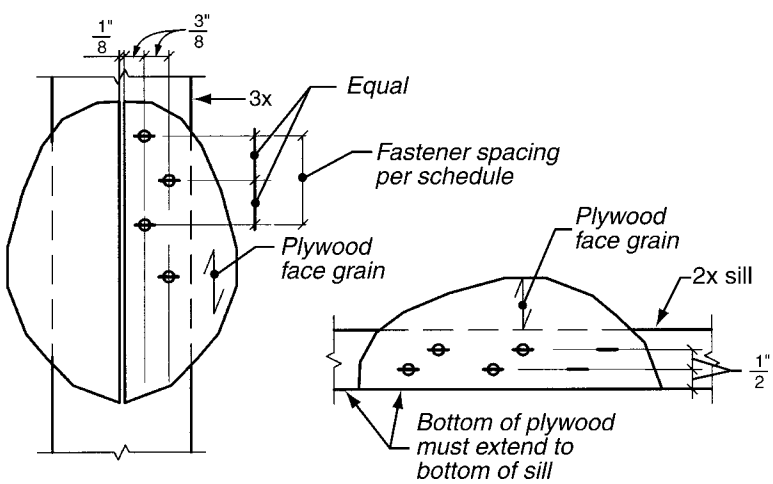

Figure W2-5 Multi-row fastener layout

For Plan Check Engineers

Review test data and Evaluation Reports or other documentation submitted to justify alternative fastener materials or methods and capacities of overlays using multiple sheathing layers.

If edge and boundary nailing spacing requires multiple rows ask for details showing how far apart the designer wants the rows spaced. Look for adequate framing widths at those locations on the plans or in clearly defined notes.

Ensure that if screws are used, the shear capacity has been established in tests of sheathing capacities. These may be different than published wood screw capacities for connecting multiple sawn lumber members.

For Inspectors

Review the drawing to verify the fastener type required or permitted to be used, and verify the contractor is using that fastener. Small variations in fastener diameter, length and installation can have major effects on diaphragm capacity.

Verify spacing between rows of multiple row fasteners and that the width of framing members below to receive the extra rows of fasteners is adequate.

Do not accept a field substitution of screws for nails or staples, nor substitution of staples for nails unless this substitution has been reviewed and approved by the design engineer.

2.1.4 Diaphragm Collector and Chord Members

Issues and Concerns. Collectors are essential links in the load path that must be able to deliver seismic forces from diaphragms into vertical lateral-force-resisting seismic elements. The lateral force transfer capacity of a diaphragm is dependent on the proper size, location, and splicing of collector members.

A Discussion and Examples

Identifying the Collector Members and their Extent

Collector members are used to transmit diaphragm forces into shear walls or frames. The collector member can be identified on drawings or in the field as a member in line with one or more shear walls or frames, and that is connected to the ends of the shear wall or frame. In buildings with wood framed walls the collector member is often the double top plate of the framed wall. This is usually the case for exterior walls, and also occurs where interior walls extend across the width of a building. At interior walls that are not continuous, collectors involve a combination of floor or roof framing members, (beams, joists and blocking), tied together using steel straps or brackets.

Where double top plates form collectors, the wall top plate should extend the full length of the wall, including those portions above door and window openings. At the diaphragm perimeter, collectors generally extend the full diaphragm length because this member normally also serves as a chord for perpendicular forces, and therefore needs to extend the full length. At interior shear walls it is desirable to have the collector extend the full length of the diaphragm; however, where the force resisted by the shear wall is small, a collector extending less than the full width can sometimes be justified by calculation.

Fastening of Collector Members

The diaphragm sheathing must be fastened to the collector member over its full length with the specified diaphragm boundary nailing. In cases where interior collectors occur at two adjoining diaphragms, the drawings may specify either boundary nailing from each of the two diaphragms into the collector member, or when collector loads are very large, additional fastening may be specified that exceeds the normal boundary fastener capacity.

Sometimes collectors are located where the sheathing can be fastened directly to the

collector. However, when a wall double top plate is the collector, the sheathing must be fastened to blocking or a rim joist, which in turn needs to be fastened to the double top plates. Where the lateral force along the collector does not exceed 150 pounds per linear foot (plf), toe nailed connections are permitted to fasten the blocking or rim joist to the top plates. This is a new limitation in the 1997 UBC. For larger loads, some other connection, such as use of light gage steel framing clips will be necessary.

Splicing of Collector Members

Where double top plates are used as collectors, the drawings generally include typical details for top plate splices. The code minimum splice is a four foot lap of the upper and lower plates and 8-16d face nails. However, the capacity this provides is small. As the collector forces get higher, bolting between the lapped plates may be used, or steel splice plates using nails or bolts can be provided. Special details are required to provide continuity of the collector at changes in the roof slope and at vertical or horizontal offsets in top plates.

Where members other than double top plates serve as collectors, other types of connections will be used. Specially designed trusses, joists, beams, or girders supporting vertical loads often serve as the collectors along interior wall lines. Splices in these collectors involve connections between members and between the collector and the shear wall or frame. One commonly used connection at beams is a steel strap or plate on each side with bolts through the beams. This connection is sometimes an integral part of a beam hanger where beam depths change at a splice location. Another common method is a pair of tie down brackets installed on each vertical face of both beams, with a rod extending between them. Other types of members will often require specialized hardware to provide similar continuity splices

Where concrete or masonry walls, or steel frames are used as vertical resisting elements instead of wood shear walls, the collector connections involve interconnection between wood and the other materials. Collector forces in buildings with concrete or masonry walls will normally be much larger and the connection detailing becomes more critical. Collector connections to concrete or masonry walls often involve steel brackets and multiple bolts through the wood member, attached to the wall using anchor bolts embedded into the concrete or masonry wall. Alternately, reinforcing steel can be welded to an end plate of the bracket with the reinforcing steel extending into the masonry or the concrete wall. Collector connections to steel frames often involve a wood member located above the level of the top flange of the frame beam. The collector member beyond the frame may be a single piece that extends over the frame, or may be spliced to a wood nailer connected to the top flange of the frame beam. The nailer connection to the beam is often provided by a series of threaded steel studs welded to the top flange of the steel beam. Occasionally, a wood collector member must attach directly to the end column of the frame using brackets welded to the column.

Collector Member and Connection Design Forces

The provisions for design of collectors in specific types of buildings have changed in the 1997 UBC. Section 1633.2.6 requires that collectors be designed for what the code describes as the estimated maximum earthquake force that can be developed in the building. This is a force ranging between 2.2 to 2.8 times larger than the "design" level force, depending on the type of structural system used to resist lateral loads. This magnified force, E_m is roughly equivalent to the force determined in prior code editions by multiplying the design force by the factor 3/8 R_w where R_w is a structural response modification factor to reduce expected earthquake ground accelerations to design-level accelerations. The magnified force E_m is a strength design force rather than an allowable stress design force. Conversion of strength level forces to allowable stress design values are provided in the code.

The 1997 UBC requires that collectors in wood frame construction that are transmitting earthquake forces contributed by concrete or masonry walls be designed at the E_m force level. The intent of using this larger force is to ensure a collector is not the weak link in the lateral force resisting system, because collector failure eliminates the load path for lateral forces to reach shear walls or frames. Except for locations where discontinuous shear walls occur, buildings with all light-frame construction (wood or steel stud walls) are exempt from applying this higher force level to collectors. The rationale for the exemption is based on:

- The limited lateral forces that develop in light frame structures, and the typically close spacing between resisting elements.
- An absence of reported failure of collectors in light-frame construction.
- Detailing rather than force level is thought to be of primary importance in the earthquake performance of light frame construction. Using larger design forces could produce poorer performance because wood member splitting can result during installation of closely nailed connections.

Miscellaneous structural steel framing used for vertical loads in buildings that are otherwise wood light-frame construction, are permitted without triggering the E_m force level. However, if steel braced frames or moment frames are included as lateral-force-resisting elements, in combination with wood- or steel-framed shear walls, the code exception noted above does not apply and collector design must use the E_m forces.

Chord Member Issues

Chords are continuous members occurring at the diaphragm perimeter, and at other diaphragm boundaries that are perpendicular to the applied lateral forces. They act as the beam flanges of the diaphragm resisting tension and compression forces caused by bending of the diaphragm. In buildings with wood-framed walls the diaphragm chord, like the collector, is often the double top plate of the framed wall. This is usually the case for exterior walls, and can also be the case for interior shear walls that define a diaphragm boundary. Like collectors, chord members will sometimes involve combinations of floor or roof framing members, beams, and blocking, tied together using steel straps or brackets.

Wood framed diaphragms that are long and narrow develop very high compression or tension forces in the chord members along the long side. Splices in chord members are of particular concern because of large tension forces.

Similarities Between Chord and Collector Members

Both chord and collector elements fall under the general category of wood diaphragm boundary elements. Their construction and design concerns are essentially the same with a few exceptions. The discussions in the previous section on collector members apply to chord members, with the exception that the magnified force E_m force does not apply when determining chord forces.

B. Resolution of Issues Relating to Diaphragm Collector and Chord Members

For Designers

Designs relying on toe nails to transfer diaphragm forces out of blocking or joists to wall top plates will now be limited to a maximum of 150 plf.

Collectors in buildings other than those using wood structural panels over wood or steel studs as the only resisting system, must be designed to resist the magnified force E_m, rather than the design level force. The E_m force is a strength level design force. Therefore allowable-stress-based designs need to apply this force to a corrected allowable stress as directed by the code.

For Plan Check Engineers

Verify that where required, collector members, splices and their connections to resisting elements are designed for the

magnified force E_m. This requires that the strength design force E_m, be correctly applied in a typical allowable stress design for wood members and connections. This code requirement is new and may be overlooked by the designer; however, it does not apply to a building exclusively using wood or steel framed shear walls sheathed with wood structural panels, as its lateral resisting system.

For Inspectors

Compared to buildings constructed under the 1994 UBC, expect to see larger or more bolts in connections where wood collector member connections occur in concrete and masonry wall buildings, designed according to the 1997 code.

Collector member splices and connections at the end of collector beams to shear walls or frames are critically important to the lateral load path. Verify from the plans that each of these type of connections match the drawing details.

2.1.5 Penetrations and Floor Coverings

Issues and Concerns. When not properly designed and constructed, diaphragm penetrations can significantly reduce the performance of the diaphragm and can allow earthquake damage to occur near the edges of openings. Ventilation openings, traditionally located in shear transfer blocking along the edges of roof diaphragms are also a concern. Diaphragm toppings may influence the earthquake behavior of light frame buildings, by adding to the mass and the shear stiffness.

A. Discussion and Examples

Size and Placement of Penetrations through the Diaphragm

The structural significance of penetrations varies depending on the size of the penetration with respect to the diaphragm dimension between bracing walls or frames, as well as the location of the penetration with respect to the diaphragm boundaries.

Detailing of Penetrations

Special detailing for penetrations often is specified when the opening dimensions exceed ten percent of the diaphragm width. When penetrations can be placed between the spacing of typical framing members, detailing needs to be provided only for the sheathing discontinuity. When penetrations interrupt framing members, detailing for additional framing is also needed.

Ventilation Openings that Affect Transfer of Diaphragm Forces

Providing cross ventilation of rafter spaces enclosed by finish materials applied directly to their bottom surface can create difficult situations for a roof diaphragm's shear transfer elements. Part of the ventilation is provided along the roof eave edge blocking and the remainder is often provided by holes or slots in the sheathing at the ridge that is covered by sheet metal cap.

One of the difficult situations is caused by the use of continuous ridge vents on sloping roofs. The desired ventilation situation is to have a continuous slot several inches wide through which air can circulate. While the roof framing members will continue across this slot to the ridge member, the sheathing is usually stopped several inches from the ridge. When seismic loading is parallel to this ridge, the shear being transferred is generally close to zero, if the ridge is near the center of the building. However, for seismic forces perpendicular to the ridge, shear forces do need to be transferred across this slot, in order to allow transfer of lateral forces to the chord on the far diaphragm perimeter. Except for diaphragms with extremely light loads, portions of the slot need to be covered with structural sheathing for shear transfer. One solution is to provide intermittent ridge slots, but the minimum amount of sheathing needs to be calculated by the building designer.

The other very common problem is where large holes for ventilation are used in blocking between rafters over the exterior walls. The blocking is a very important part of the shear transfer load path between the

diaphragm sheathing and the top plates forming the diaphragm chord or collector. Nailing from the sheathing penetrates the top of the blocks and other nails and sheet metal connectors will be used to connect the bottom of the block to the wall top plate. Holes for ventilation must be limited in size and spaced apart so that sufficient area of the block is available for the nails from those connections to penetrate the block without splitting it, and transfer all of the required lateral loads.

The Effect of Floor Treatments

Adhesives applied between sheathing and floor framing, as well as toppings applied over floor sheathing can significantly influence how a wood diaphragm will respond to earthquakes. These effects have traditionally not been considered in most building designs because insufficient test data exist to accurately quantify the effects. The effects should be qualitatively considered by the design professional in evaluation of existing buildings, as well as in new building design.

It is very common for multi-family residential and office buildings to have a non-structural floor topping placed over the floor sheathing to help reduce sound transmission. Common toppings include dense poured gypsum and light weight concrete. The weight of these toppings are routinely taken into account in the structural design for the added dead load to gravity resisting framing, and the added mass they impart to the total lateral design. The concern, however, is that the toppings may significantly change the stiffness of the diaphragm and thereby alter how it initially distributes loads to the various resisting elements below its level. The other concern is that during strong earthquake shaking, the stiffness may change abruptly when the bond between the topping and the structural sheathing is broken. This can suddenly change the horizontal deflection response of the diaphragm and cause damage to collector and chord members.

Gluing of diaphragm sheathing to framing members was discussed in the earlier subsection titled Special Fastening Requirements.

B. Resolution of Issues Relating to Penetrations and Floor Coverings

For the Designer

The architect and the structural design engineer need to discuss and find a balance between the ventilation openings required through diaphragm sheathing or eave blocking and the structural demands at those locations.

The designer is encouraged to consider the stiffening effects and changes in the dynamic response of a diaphragm that has floor toppings, when deciding the distribution of loads to vertical resisting elements, and the possible higher demands that may occur on the chords and collectors during earthquakes.

Diaphragm blocking, ties and extra nailing may be needed around large openings in highly stressed diaphragms. These locations should be analyzed and where reinforcement of the diaphragm is needed, they should be specifically detailed on the plans.

For Plan Check Engineers

Verify that large diaphragm openings have been analyzed and details that apply to the edges of openings are clearly referenced on the framing plans.

Carefully compare the architectural sections and details along roof eaves and ridges with the structural details at those locations. Where these details conflict because of ventilation openings being provided, make sure the issue is resolved by notifying both the architect and engineer that a conflict exists.

For Inspectors

Check the plans for any special nailing, blocking or straps along the perimeter of large openings for stairs, skylights or elevators and ensure they have been installed. Improperly constructed openings in diaphragms can cause unnecessary earthquake damage to occur.

Roof and floor perimeter edge blocking is a very important load path transfer member. The engineer should be notified whenever roof or floor diaphragm boundary nailing cannot be provided because blocking is removed for openings into the attic or floor cavity.

Roof eaves are normally diaphragm boundaries making them a very important shear transfer location. Verify that the blocking installed between rafters above an exterior wall, containing ventilation holes, is substantial enough to accept all the nails it requires to make the transfer of forces between the diaphragm edge and the top plate of the exterior wall. Split blocking must be removed, replaced, and renailed.

2.1.5 References and Resources

APA, 1983, *Voluntary Product Standard PS1-83*, APA-The Engineered Wood Association, Tacoma, Washington.

APA, 1992, *Voluntary Product Standard PS2-92*, APA-The Engineered Wood Association, Tacoma, Washington.

APA, 1994, *Northridge, California Earthquake*, T94-5, APA-The Engineered Wood Association, Tacoma Washington.

APA, 1996, *Wood Structural Panel Shear Walls*, Report 154, APA-The Engineered Wood Association, Tacoma Washington

APA, 1997, *Design/Construction Guide--Diaphragms*, APA-The Engineered Wood Association, Tacoma, Washington.

APA, 1997, *Plywood Diaphragms*, Report 138, APA-The Engineered Wood Association, Tacoma Washington

ATC, 1981, *Guidelines for the Design of Horizontal Wood Diaphragms*, ATC-7 Report, Applied Technology Council, Redwood City, California.

Breyer, D.E., 1993, *Design of Wood Structures*, 3rd Edition, McGraw-Hill, Inc., New York, New York.

BSSC, 1997, *NEHRP Recommended Provisions for Seismic Regulations for New Buildings and Other Structures* and *Commentary* (FEMA Reports 302 and 303), Building Seismic Safety Council, Washington D.C.

Hamburger, R.O., 1995, "Lessons learned in the Northridge earthquake on wood frame buildings," *Northridge Earthquake: Lessons Learned*, 1994 Spring Seminar, Structural Engineers Association of Northern California, San Francisco, California.

Hamburger, R.O., and D.L. McCormick, 1995, "Implications of the January 17, 1994 Northridge earthquake on tiltup and masonry buildings with wood roofs," *Northridge Earthquake: Lessons Learned*, 1994 Spring Seminar, Structural Engineers Association of Northern California, San Francisco, California.

ICBO, various editions. *Uniform Building Code*, International Conference of Building Officials, Whittier, California.

ICBO, various editions. *Roof, Wall, and Floor Panels*, International Conference of Building Officials, Whittier, California.

ICBO ES, 1995. *Uniform Code for Building Conservation*, ICBO Evaluation Services, Inc., Evaluation Report 1952, Whittier, California.

SEAOC, 1996, *Recommended Lateral Force Requirements and Commentary (6th Edition)*, Structural Engineers Association of California, Sacramento, California.

SEAOC, 1997, *Seismic Detailing Examples for Engineered Light-frame Timber Construction*, Structural Engineers Association of California, Sacramento, California.

SEAOC, 1997, *Guidelines for Diaphragms and Shear Walls*, Structural Engineers Association of California, Sacramento, California.

2.2 Shear Walls

The objective of this section is to enable designers, plan reviewers and inspectors to understand the earthquake resistive properties of shear walls, how they should be properly constructed and to provide guidance on new code provisions applicable to sheathed wood framed shear walls

2.2.1 Sheathing Materials, Layout and Fastening

Issues and Concerns. Attention is needed to proper materials, layout, and fastening of shear wall sheathing.

A. Discussion and Examples:

Sheathing And Layout

This section uses the terms panel or sheathing when discussing shear wall sheathing consisting of wood structural panels. There are, however, three different products that qualify as wood structural panels. They include all-veneer plywood, oriented strand board (OSB), and waferboard. Use of shear wall sheathing materials other than wood structural panels will be discussed later in this section. Sheathing standards and grade stamps, discussed in the prior Section 2.1, Diaphragms, will also apply to shear walls.

Sheathing layout includes a number of considerations including: the size of sheathing pieces, the orientation of the panel face grain with respect to the framing members, panel edge blocking, and requirements for 3x framing members at abutting panel joints.

Shear wall sheathing is typically laid out with the long dimension vertical, although horizontal orientation is acceptable. The vertical orientation is typically used because the UBC requires all panel edges not supported on framing to be blocked, and because in this orientation, all vertical edges should align with studs. In most wood frame buildings story heights are such that a single sheathing panel can usually extend from the sole plate or sill plate, to the top plates above. Sheathing panels in 9 foot or 10 foot length dimensions are available to accomplish this without adding a row of horizontal blocking. When blocking is necessary, flat 2x blocking may be used, unless 10d common nails are specified for edge fastening. If 10d nails are used, the blocking must either be 3x flat blocking or full depth blocking to obtain the full 1-3/4 inch penetration of the nail into the framing. Full depth blocking may also be required in some cases for other than structural reasons, for example, where draft stops are needed in walls over 10 feet in height.

Of particular interest is the location of the horizontal sheathing panel joint on multi-story exterior walls. If the panel joint can be located at mid-height on the floor rim joist or blocking as shown in Figure W2-6, the story to story shear transfer and wall to floor framing connections shown in Figure W2-7 can be simplified. This horizontal joint is also very important with respect to wood shrinkage issues, particularly where sawn lumber is used for floor framing. Because the moisture content of the floor framing is likely to continue to drop after construction, with shrinkage resulting, the edge nailing to the rim joist is shown in Figure W2-6 near the very top and very bottom, and a gap is shown between plywood panels. This detailing permits the shrinkage of the floor framing without buckling of the wall sheathing. Along panel joints, a gap of 1/8 inch between sheets is recommended to allow for dimensional changes from temperature or moisture.

Similar to diaphragms, it is desirable to use full size sheathing panels for the majority of a shear wall, and only add smaller panels where necessary. The UBC does not establish a minimum width of an individual sheathing panel in fully blocked construction; however, other sources recommend a minimum dimension of two feet. The use of tall, narrow individual panels in shear walls has been shown in tests to greatly increase horizontal deflection compared to walls using standard 4-foot-wide panels.

The 1997 UBC has substantially changed the threshold where 3x framing is required in Seismic Zones 3 and 4. Studs, blocking, and foundation sill plates of 3x material are now required when the allowable shear capacity from UBC Table 23-II-I-1 exceeds 350 pounds per linear foot (plf). This means

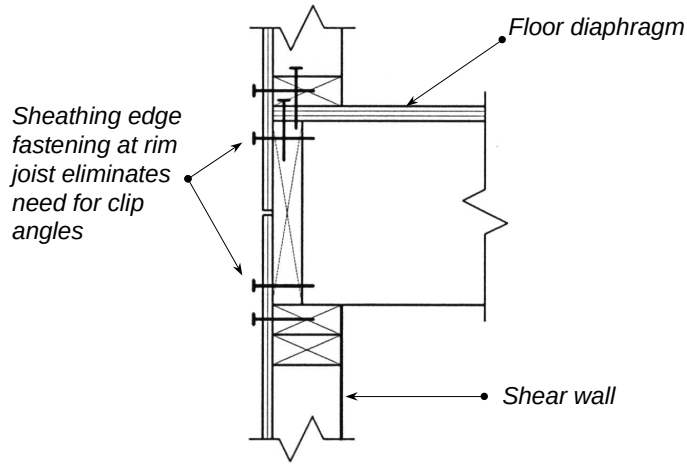

Figure W2-6 Simple shear transfer between stories using sheathing

that 3x foundation sills and studs at 4 ft on center will be required for a good portion of the shear wall construction in California, because where the spacing of 8d or 10d common nails is less than 6 inches on center, the tabular capacity is nearly always more than 350 plf. An exception to this rule, for foundation sill plates only, is provided in footnote number 3 of Table 23-II-I-1. A detailed discussion of splitting concerns at foundation sills and the alternatives to providing a 3x sill plate are included in Section 2.3 Connections between Seismic Elements.

Some incidents of studs and sill plates, being torn along closely spaced lines of nailing were reported following the Northridge earthquake. The use of 3x framing at abutting panel edges and at foundation sills should help mitigate this problem by limiting the amount of splitting that can occur during the original construction, before earthquake forces are applied. The use of 3x members at abutting sheathing panel edges provides three important improvements:

- Provides a wider framing surface that should help reduce the occurrence of

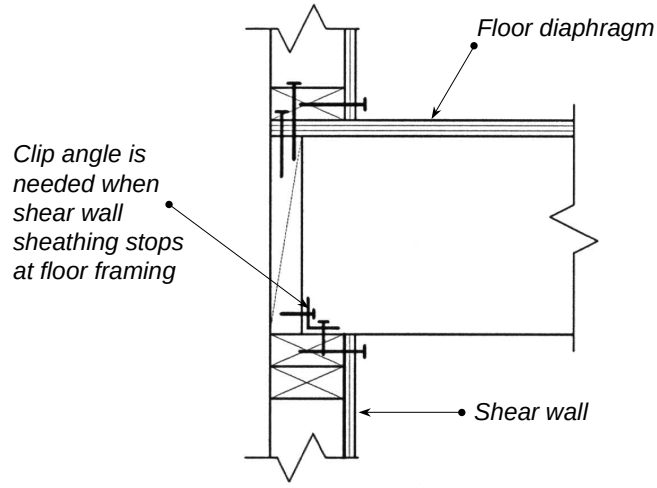

Figure W2-7 More difficult to construct shear transfer using nails and framing clips

sheathing fasteners missing the studs (shiners).

- Allows the distance from the sheathing edge to the fastener centerline to be increased.

- Provides a width that allows staggering of nail fasteners into more than one row, which will produce greater spacing between nails in the stud or sill.

For retrofit of shear walls, the 3x stud framing requirement can be satisfied by adding new studs between existing studs. However, foundation sill plate replacement will be very difficult and costly.

In lieu of using 3x studs, an alternate is to provide an engineered interconnection between two 2x studs. This will likely occur in retrofits, and in new construction when a required 3x stud was omitted. The sheathing edge nail spacing will primarily dictate the minimum interconnection for two studs at a panel joint, in conjunction with variations in the wall height and the minimum panel width used. The designer must carefully consider the interconnection design to avoid aggravating the stud splitting problems the 3x is intending to address. The potential close spacing of face nails to connect two studs, in addition to the sheathing edge nailing could make bolts a preferred interconnection method.

Using staples as the sheathing fastener, rather than nails, is another option because staples raise less concern of stud splitting during fastening, and because the UBC only prescribes the new 3x member requirements in its nail fastener table. However, Evaluation Reports for using staples should be checked to verify when 3x framing is required.

See the shear wall depiction in Figure W2-8 for a summary of the major layout, framing and fastening issues discussed in this section.

Fastening

The fastener type most often specified for shear walls is a common wire nail. This nail type is the basis of UBC Table 23-II-I-1. Typical nail sizes for shear wall sheathing fastening range from six penny (6d) to ten penny (10d) depending on the sheathing thickness and required capacity. There are only two classifications of shear wall sheathing fastening. They are:

- Edge fastening at all panel edges.

- Field fastening at all interior panel supports. For nailed shear walls the required field nail spacing is 12 inches on center for studs at 16 inches. For some thin sheathing panels, with studs at 24 inches on center, 6 inch field spacing is required.

While common wire nails are by far the most commonly specified sheathing fastener, they do not appear to be the most commonly used in construction. In current construction, most shear wall sheathing is fastened with some type of pneumatically driven nail. Acceptance of ICBO-ES (Evaluation Service) allowable values for pneumatic nailing is at the discretion of the Building Official

Most of the concerns raised in the Materials, Layout and Fastening and Special Fastening Requirements subsections, of the preceding Diaphragms Section 2.1, will equally apply to shear walls sheathed with wood structural panels. See Diaphragms Section 2.1 for a discussion of the following topics:

- Fastener installation methods known to adversely effect capacity.

- The effect on capacity of wood species or chemical treatment of the framing into which the sheathing fastener is being driven.

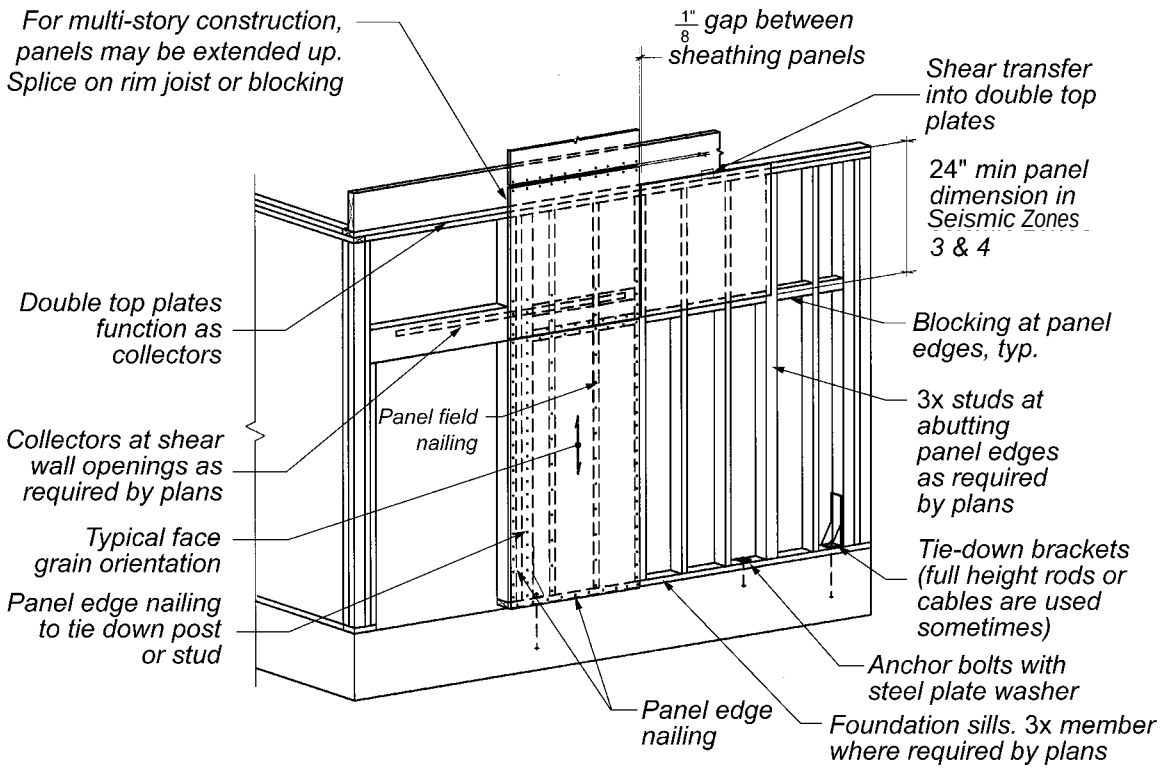

Figure W2-8 Typical shear wall elevation

- Connections, other than sheathing fasteners, that are part of the load path between the diaphragm chord or collector and the shear wall.

- Sheathing fastening using pneumatically driven fasteners, wood screws, staples, glue, and multiple rows of fasteners.

B. Resolution of Issues Relating to Sheathing Materials, Layout, and Fastening

For the Designer

Make sure that the locations of 3x framing or blocking are clearly noted in shear wall schedules and notes.

If common nails are the basis for the design, indicate that "No Nail Substitutions are Permitted" or provide a fastener schedule in anticipation of the actual type and diameter of nails that will be used.

Be prepared to provide a detail for interconnection of two 2x studs at shear-wall panel joints, where the contractor forget to use a single 3x stud and needs a solution.

For the Plan Check Engineer

Verify that 3x foundation sill plates and 3x framing at abutting panel edges with 4-inch on center nail spacing are being clearly specified, as required in Seismic Zones 3 and 4 by the 1997 UBC.

Check the details used to transfer forces into and out of shear walls at roof, floor and foundation levels. The location of exterior wall sheathing horizontal joints must be clearly shown in sections or details.

For the Inspector

Confirm whether the use of 3x foundation sills and studs is required. Generally this will be so, for all wood structural panel sheathing with nails spaced at 4 inches on center or closer. A code exception will allow 2x sills, but only when sill bolt spacing is reduced. The plans should

specify where 3x foundation sills and studs are to be installed.

Do not approve two 2x studs as equivalent to a single 3x stud at a panel joint unless you have confirmed that the interconnection of the studs being provided has been engineered. The standard 16d face nails at 24 inch spacing used at built-up corner studs, and other typical sistering of studs is definitely not enough interconnection at a panel joint where sheathing nails are spaced 4 inches or closer. Inter-nailing in the range of 4 to 6 inch spacing or bolting together of the studs will most likely be the necessary connection. Remember that too much inter-nailing may cause splitting of the studs when the sheathing nailing also is closely spaced.

2.2.2 Retrofitting Shear Walls

Issues and Concerns. The seismic retrofitting of existing shear walls may involve improvement of sheathing fastening, shear wall chord connections, collector connections, and other force transfer connections into and out of the shear wall. It is necessary to have a good understanding of the as-built condition of the shear walls in order to design a retrofit that will provide a complete and adequate load path. Where existing bracing materials are being removed and framing exposed, there is ample opportunity to make the resulting shear-wall construction close to, if not exactly the same as a new shear wall.

Where it is planned that the existing sheathing remain in place, and be refastened to improve its capacity, the concerns that arise include:

- Existing framing members at abutting panel joints. Where an existing building was constructed based on a code prior to the 1997 edition of the UBC, it is very likely that edge nails spaced at 4 inches or 3 inches on center are fastened to 2x framing at abutting panel edges. Even if no additional capacity is required from the existing construction, existing nailing is often found to be overdriven and remedial fastening is needed to maintain the assumed capacity. If it is necessary to add fastening in order to increase the capacity of the shear wall, some method that will not result in splitting of the existing wall framing is needed. It may require pre-drilling.

- Existing panel edges which are not blocked. Occasionally existing construction with unblocked shear wall edge panels is encountered. APA has performed some testing on this type of installation (APA Report 154) and found the capacity to be approximately 50 percent of the capacity of similar construction that is fully blocked. For anything other than very lightly loaded one-story buildings, this condition

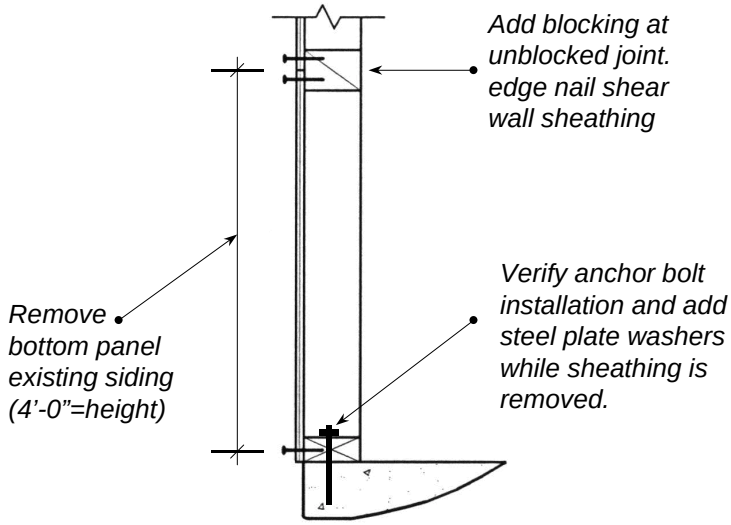

Figure W2-9 Removal of existing sheathing for shear wall retrofitting and treatment for

should be corrected. See Figure W2-9 for a repair approach applicable to horizontal joints.

- Edge nailing of sheathing to framing with tie downs attached. Where existing tie downs are being reused in a retrofitted wall, it is important to identify the existing tie down location and the wall chord framing members the existing tie down is fastened to. This is necessary in order to ensure that the existing shear wall sheathing is edge nailed to this chord member, permitting load to be transferred to the tie down device.

- Additional anchor bolts required. Often where existing shear wall capacity is being increased, the existing anchor bolts will not have adequate capacity for the higher forces. In addition, it is highly unlikely that existing anchor bolts in buildings constructed before enforcement of the 1997 UBC provisions, will have steel plate washers, which are now required in Seismic Zones 3 and 4.

It is recommended that portions of the existing wall covering be removed to the face of the studs on at least one side to assess existing conditions as shown in Figure W2-9. If this is accomplished by a removal that is several feet high across the bottom of the shear wall, it will allow an opportunity to locate or add tie downs, to add plate washers to existing anchor bolts to check for oversized holes, and to install new anchor bolts. Perhaps more importantly, this removal will allow an assessment of the existing sheathing nailing into framing or blocking (how many shiners occur), and the general condition of the existing wood framing. Each of these is important to a successful upgrading of an existing shear wall. Decisions regarding the extent and location of such removal must be balanced with the additional cost to replace finishes in those locations.

2.2.3 Shear-Wall Height-to-Width Ratios

Issues and Concerns. The 1997 edition of the UBC has added a definition indicating how the shear wall height-to-width ratio is measured, and has restricted the maximum height-to-width ratio for wood structural panel shear walls in Seismic Zone 4.

A. Discussion and Examples:

New Height-to-Width Limits

Although seismic drift requirements have appeared in the UBC since the 1976 edition, it has not been general engineering practice to calculate the drift of wood shear wall structures and check for conformance. It has generally been felt that meeting the height-to-width ratio requirements provides adequate limitation of drift for wood shear walls. Recent testing reported in ATC R-1 (ATC,1995) and Dolan et al. has indicated that for height-to-width ratios higher than 2:1, wall drift increases significantly, and further, that the increase in deflection is not adequately predicted using the equations in UBC Standard 23-2. These test results, combined with the significant damage to buildings with slender shear walls observed after the Northridge earthquake, gave support to limiting shear walls to a 2:1 maximum height-to-width in Seismic Zone 4. The more slender shear walls previously permitted will no longer be allowed to be calculated as shear walls. If, in the future, methods are developed to more accurately predict shear wall deflections, the code's height-to-width ratio limit may need to be revised again.

When the 2:1 ratio limitation was proposed to ICBO, the need for a definition to allow consistent application of the ratio was identified. Both a definition and two diagrams have been incorporated into the UBC, (Figures W2-10 and W2-11). The definition and diagrams address two types of shear wall configuration. By far the most common type is a shear wall that extends the full story height, with its width measured between door and window openings, as shown in Figure W2-10. In this configuration the height-to-width ratio is defined as the ratio of the height (measured

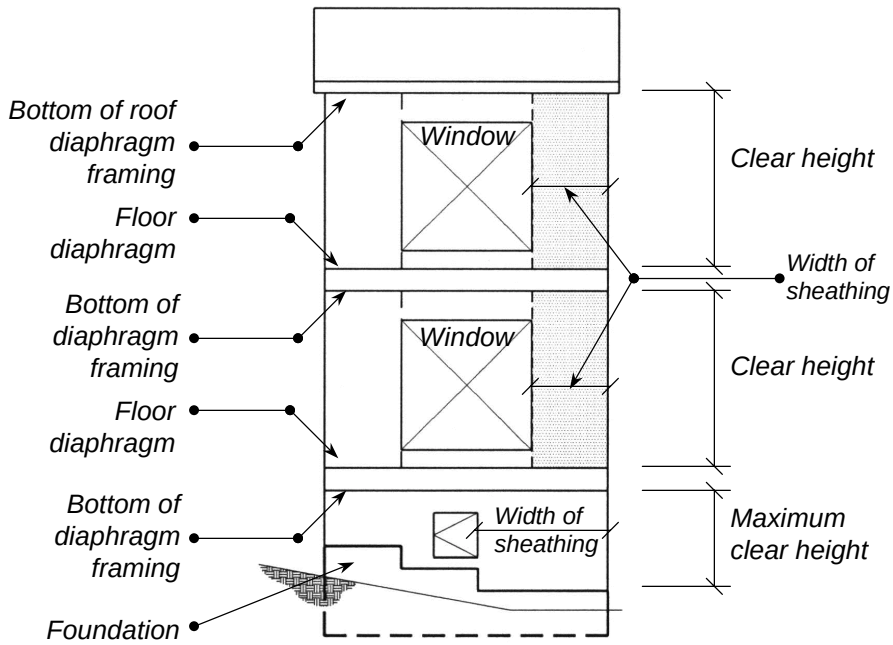

Figure W2-10 Standard shear wall height-to-width ratio

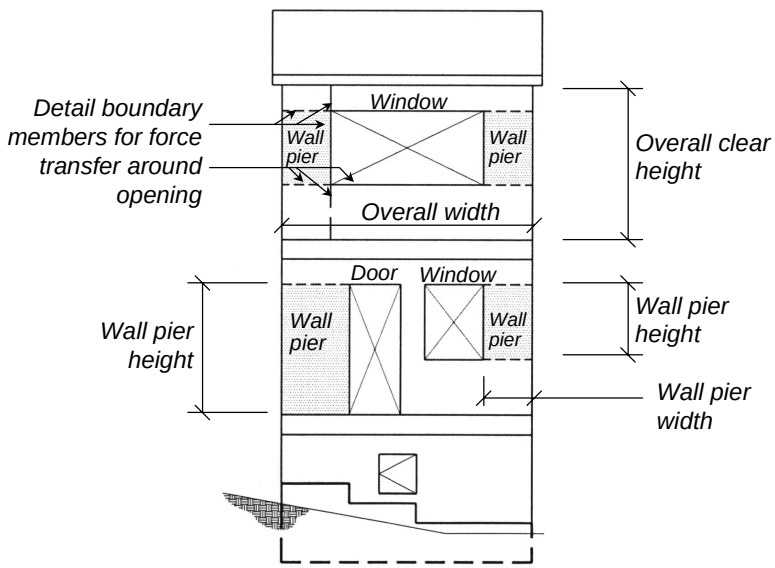

Figure W2-11 Shear wall pier height-to-width ratio when force transfer is provided around openings

as either the maximum clear height from the foundation to the bottom of the diaphragm framing above, or the maximum clear height from the top of the diaphragm to the bottom of the diaphragm framing above) to the width of sheathing having that height.

A second, less common definition of a shear-wall height-to-width ratio is used for a

wall pier when a wall is fully sheathed and detailed for continuity around door and window openings. This configuration is shown in Figure W2-11. With this configuration the designer has detailed the wall to behave like a moment frame with the wall section above (and sometimes below) the door and window acting as a beam, and the wall pier at the sides of the window or door acting as columns. The definition of height, used for the height-to-width ratio of a wall pier, is the height of the opening to which the pier is adjacent. The width is the full width of sheathing at the pier.

Like steel moment frames, the detailing of wood shear walls with continuity around openings requires a great deal of attention to design and even more attention to construction. The framing members at the edges of the opening are acting as tension and compression chord and collector members. Strapping and blocking extending beyond the opening are needed to transfer forces in and out of these members. Gaps in blocking, slack in straps, misplacement of straps, or any other missing items, are likely to greatly increase the wall deformation and resulting damage. While the UBC controls the height-to-width ratio of the wall piers, the slender wall "beams" above and below openings are not controlled. The height-to-width ratio of these wall beams should be similar in proportion to wall piers, otherwise they will have a stiffness that may be incompatible with the pier, and result in significant deformation of the entire wall. Headers of 4x12 solid sawn material, or similarly sized engineered wood have been shown in testing to provide reasonable continuity around openings, when properly detailed fastening is provided. For information on designing this continuity, see the discussion under the subsequent section Boundary Members.

Shear wall configurations with continuity around the openings should not be confused with the "perforated shear wall" approach currently under development for use in the 2000 International Building Code (IBC). The perforated shear wall approach does not require design or detailing for continuity around openings, but instead takes a capacity reduction to account for the incomplete continuity. The fastening required for the perforated shear wall approach and other parameters that may effect its performance are currently being studied.

An understanding of all the different sources contributing to wall deflection is just starting to develop from the results of recent testing. Besides the contribution of the height-to-width ratio, other sources of deflection include:

- sheathing sheet size,
- tie-down device slippage,
- cross grain shrinkage of floor framing,
- crushing of sills and floor joists under compression loading,
- fastener slip between the framing and sheathing.

The conclusions noted in report ATC R-1 indicate that the actual drift, at force levels producing the code allowable shear capacity for the wall, are more than three times the 1994 UBC code limit of 0.005 times the wall height. It was recommended that approaches be developed to reduce the deflection and therefore improve the performance of these walls. Likewise, APA-The Engineered Wood Association has been investigating alternate designs of slender walls, and methods to reduce slender wall lateral deflection. Until methods of substantially stiffening these slender walls are available, designers should be cautious when evaluating their deflection compatibility with other bracing elements.

B. Resolution of Issues Related to Shear-Wall Height-to-Width Ratios

For Designers

The maximum shear-wall height-to-width ratio was limited to 2:1 in Seismic Zone 4 to limit damage caused by the larger drift allowed by the more slender 3-1/2:1 walls previously permitted. Wood structural panel shear walls designed as individual piers at

openings require complete detailing of the continuity of the pier chord and collector elements into the surrounding wall framing and sheathing.

For Plan Check Engineers

With the significant widening of shear walls in Seismic Zone 4 to meet the 2:1 height-to-width ratio limit, the new code definition for how the wall height is to be measured takes on greater importance. In the past, some engineers argued that the wall height was measured from the sill plate to the bottom edge of a wall opening, when a beam or header occurred above the opening. This interpretation allowed narrower wall segments to be used than the code intended. That definition can still be used; however, the designer must provide an analysis for a wall pier configuration and provide the necessary continuity connections to transfer the pier forces into the other parts of the wall.

For Inspectors

Wood structural-panel shear walls will need to be at least 1/2 as wide as they are high in Seismic Zone 4 based on the new 2:1 height-to-width ratio. For a typical 8-foot-tall stud wall the sheathed width must therefore always be at least one full 4-foot-wide panel. The exception to this is a wall, with openings, that has been specifically engineered and has details for additional vertical and horizontal straps and with blocking to carry forces into the sheathed wall portions adjacent to the openings and out of the sheathed wall portions to the sill plate and foundation. The blocking, straps and extra nails should be called out on the drawings.

2.2.4 Distribution of Forces to Shear Walls

Issues and Concerns. Serious earthquake damage can result from incorrect design assumptions regarding the distribution of lateral forces to shear walls. Two major issues will be discussed. The first issue is in-plane distribution when more than one bracing material is used to provide resistance in a single wall line. The second issue is the distribution of forces from the diaphragm to the shear walls, based on the relative stiffness of the diaphragm with respect to the shear walls.

A. Discussion and Examples

Sheathing Material Behavior

Building designs past and present have used a variety of sheathing materials including wood structural panels, lumber board sheathing, gypsum wall board, and plaster. There are three characteristics that are necessary in bracing materials:

- Strength is needed in order to resist the design lateral forces.
- Stiffness is needed to limit building drift caused by lateral forces. Drift can cause very expensive non-structural damage, and if large enough can make the building unstable.
- Ductility is necessary to accommodate multiple cycles of “real” earthquake forces that are larger than the code design forces. Ductility provides stable and predictable energy dissipation.

Wood structural panel sheathing is the sheathing material best able to address all of these requirements. Its strength and stiffness characteristics have been recognized for some time. Recent cycled load testing has demonstrated the ductility and energy dissipation capacity of the material. Gypsum board and plaster are stiffer that wood structural panels, but are also much less ductile. These materials reach their maximum strength capacities at much smaller drift levels than wood structural panel shear walls.

The failure in gypsum board involves the crushing of the board around each fastener, allowing the wall to deflect. This is both a strength and ductility issue. When using gypsum board as a bracing material, it should only take very small loads. The UBC recognizes this to some extent by reducing the allowable shear capacity by 50 percent in Seismic Zones 3 and 4. Following the Northridge earthquake, some engineers felt this is not restrictive enough, and recommended that the use of gypsum

board for earthquake bracing should be eliminated in all except very minor buildings.

Horizontally applied lumber board sheathing tends to be considerably more flexible than wood structural panels and have considerably less capacity. The flexibility is so high and the capacity so low that this sheathing is almost always replaced or sheathed over when retrofitting occurs. Diagonally applied board sheathing has greater stiffness and greater capacity, and is generally accepted as a bracing method with performance similar to wood structural panels. The current UBC includes construction requirements and capacities for diagonal sheathing.

Deformation Compatibility and In-plane Force Distribution

The major limitation with gypsum board sheathing is that it should not be used as a calculated bracing in combination with wood structural panels, because the deformations of the two materials are not compatible. As an example, Figure W2-12 shows a single wall line, where 30 feet of wall is sheathed with gypsum board and 5 feet is sheathed with wood structural panel. The gypsum board would be assigned a capacity of 50 plf, for a total capacity of 1500 pounds. The wood structural panels would be assigned a capacity of 600 plf, for a total capacity of 3000 pounds. When a seismic force is applied to the wall line, initially it will most likely be totally resisted by the stiffer gypsum board wall. If a seismic force equal to the total combined capacity noted above (4500 pounds) is applied, it will result in three times the permitted stress in the gypsum board. Once the gypsum board wall has failed, which it soon does in this scenario, the entire load will shift to the wood structural panel shear wall. The total load of 4500 pounds again exceeds the available resistance capacity, this time by a factor of 1.5. Because these two walls are in the same line and therefore will deform together, progressive failure of the two is a possible result. Gypsum board and wood structural panels that are restricted to deforming together should not be relied on to share lateral forces. The proper solution is to provide enough length of wood structural panel to carry the entire lateral force.

Force Distribution from Diaphragms

The common analyses for wood buildings assumes horizontal diaphragms to be flexible. As a result, the seismic force to a line of shear walls is determined by the area of diaphragm tributary to the wall line, without consideration of the wall stiffness on that line. This means that given identical diaphragm configurations, a three-foot-wide wall, substituted for a 28-foot-wide wall,

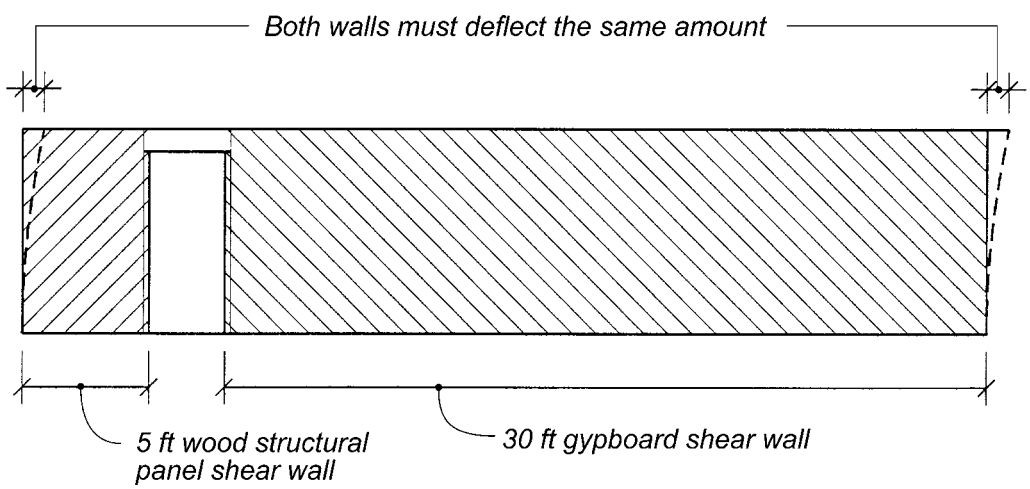

Figure W2-12 Single wall line with incompatible sheathing combination for seismic resistance

would be assigned exactly the same seismic force. Looking at Figure W2-13, it should be obvious that the three foot wall is not nearly as stiff, and will behave significantly differently than the much longer wall when resisting a similar lateral force. Beginning with the 1988 edition of the UBC, there has been a provision defining a diaphragm as rigid unless the diaphragm deflection is more than two times the story drift (1997 UBC Section 1630.6). For a rigid diaphragm, distribution of forces to walls is based on the wall stiffness, and in the example in Figure W2-13, the 3 foot wall will be assigned a much smaller lateral load.

Residential construction with many interior shear walls and short diaphragm spans will generally have rigid diaphragms in comparison to its shear walls. Concrete and masonry wall buildings with stiff walls and highly loaded wood diaphragms will tend to have flexible diaphragms in comparison to their shear walls. Most wood framed commercial buildings will fall somewhere between these two extremes.

The severity of damage to a number of wood framed structures in both the Loma Prieta and Northridge Earthquakes can be attributed in part to original designs using a flexible diaphragm analysis. Tributary area distribution of lateral loads would not have considered the significant differences in stiffness between different lines of vertical bracing elements in those buildings. While there are no new code requirements proposed, there is definitely a need to consider the application of the current code definition of a flexible diaphragm for at least some wood framed structures. Applying the current definition can result in a number of diaphragms being identified as not meeting the flexible definition criteria, suggesting that a rigid diaphragm distribution of forces by wall stiffness is appropriate. The result of a rigid diaphragm analysis will generally involve strengthening the stiffer shear walls and the adjoining diaphragm, while reducing the demand on slender walls.

At this time it is generally understood that

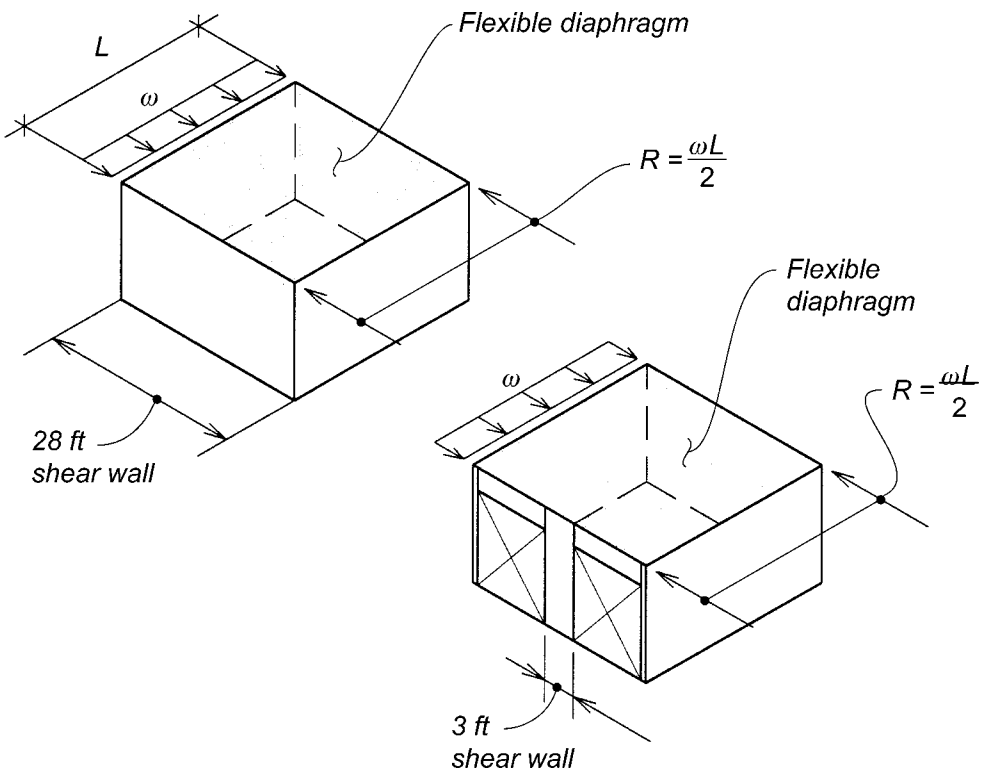

Figure W2-13 Diaphragm force distribution

diaphragm and shear wall deflections calculated using the equations in the UBC Standards are only approximate, and research is needed to refine calculation methods. Further, the UBC Standards only allow for calculation of deflections for blocked, nailed diaphragms. There is certainly justification to modify these calculations for an unblocked diaphragm, or perhaps even for stapled diaphragms, but there is insufficient information on what the modifications should be. This leads to uncertainty in the calculated deflections used to classify a diaphragm. A similar uncertainty exists when using the calculation method to determine the stiffness to be assigned to shear walls having very different height-to-width ratios. In addition, there is certainly no magic transformation in diaphragm behavior that occurs at the point where diaphragm deflection is twice the shear wall drift. Instead, it has been recognized that a range of semi-rigid diaphragms is a better model. These combined difficulties lead some to say that we do not have the tools available to investigate or determine diaphragm behavior. Alternatively, it can be argued that we need to apply, with judgement, what information we do have available. The use of a rigid diaphragm analysis and its method for distribution of forces may be a more prudent approach for some wood buildings, particularly where the center of rigidity of a structure is significantly far from the center of mass.

B. Resolution of Issues Relating to Distribution of Forces to Shear Walls

For Designers and Plan Check Engineers

Sheathing materials with incompatible deformation and ductility characteristics should not be used to share earthquake loading when they occur on the same (or nearly the same) line of resistance. A comparison of the deflection of wood diaphragms to story drift should be performed to provide a rational basis for distributing forces to shear walls or frames, particularly if the center of rigidity is substantially offset from the center of mass.

For Inspectors

Construction modifications resulting in changes to the individual width of shear walls segments, such as when one wall eliminated or is made narrower, while another wall in the same direction is made longer, can alter the forces the walls will need to resist. Such changes may appear to provide the same strength capacity, because the combined width of shear wall remains as originally approved. However, such a modification can alter the forces each shear wall segment will need to resist. Make sure the design professional is aware of any such changes, has considered the consequences, and issued documentation to accept the modification prior to approving these elements.

2.2.5 Boundary Members

Issues and Concerns. The lateral force capacity of a shear wall is dependent on the proper installation, fastening and splicing of the collector members.

A. Discussion and Examples

Full Story Height Shear Walls

Two types of shear wall configurations are described in the earlier discussion of height-to-width ratios. The most common type is a shear wall consisting of sheathing extending the full story height. In this configuration, the double top plates generally serve as the diaphragm collector, introducing the shear force into the wall. Configurations such as balloon framing at parapet walls require further consideration, and are discussed in Section 2.3, Connections Between Seismic Elements.

The other shear-wall boundary members are the chord members at each end of a shear wall. Similar to a diaphragm, a shear wall can be envisioned as a beam; in the case of a shear wall the beam is cantilevering from the floor or foundation. The shear wall chords are the beam flange members, resisting tension and compression. Like diaphragm chords, it is necessary to provide sheathing edge fastening into the shear wall chord members. There is one significant difference between diaphragm chords and

shear wall chords that should be mentioned. Diaphragm chord members generally have zero tension (or compression) at both ends and a maximum tension (or compression) at the center. The shear-wall chord forces are zero at the top of the wall and reach a maximum value at the bottom, where the chord framing member ends. Because of this, significant connection forces occur at the bottom end of the shear-wall chord.

Shear-wall chord members are generally studs or posts located at each end of the wall. The tie-down bracket or strap used to transfer the chord tension force from floor to floor, or from the bottom story wall to the foundation will often determine the minimum chord member size that is needed. Some brackets and straps can be attached to studs while others require fairly substantial posts. The fastening of the tie-down device often requires the tension chord member to be slightly inset from the very end of the wall, leaving trimmers and king studs at the wall end. However, it is essential that sheathing edge fastening occur into the chord members. When the chord member occurs at a location other than the panel edges at the very end of the wall, the panel edge fastening is often only penetrating a trimmer stud instead of the chord member. This is a serious, common error in wood construction.

Shear Walls Designed for Continuity Around Openings

The behavior of shear walls using individual wall piers between openings, and their construction issues, were discussed in the earlier Shear-Wall Height-to-Width Ratio subsection. This section discusses design considerations. In addition to the boundary members discussed above, shear walls designed for continuity around openings require boundary members at and beyond the edges of the openings. For example, shear walls with a window opening as shown in Figure W2-11, can be designed for continuity around the opening. The unit shear in the wall piers can be determined by dividing the total wall shear by the sum of the pier lengths. The moment that occurs over the height of the pier is equal to the unit shear times the pier width times the pier height. This moment results in tension and compression forces in the chord framing members at each side of the pier. Detailing must be provided to transfer the chord force from the framing member to the sheathing above and below the pier. Similarly, the unit shear in the shear wall below the window results in tension and compression forces in the horizontal framing members immediately below the window and at the sill plate. These forces are generally transferred back into the sheathing beyond the opening using steel straps and blocking.

Splicing of Chord Members and Tie-Downs

Shear-wall chord members should be continuous for the full story height. The only splicing that occurs is the tie-down bracket or strap, used to connect between walls in adjacent story levels, or from the bottom story walls to the foundation. The poor seismic performance of some tie-down devices in the 1994 Northridge earthquake, and results from recent shear-wall testing, have resulted in significant reconsideration of the type of tie-down devices that ought to be used.

Deformation at Tie-Down Devices

ATC R-1 (ATC, 1995) testing of narrow plywood shear walls reported significant deformation at tie-down devices due to the deformation of the tie-down bracket itself, the slipping of the bolts attaching the bracket to the tie-down studs, and crushing of the sill plate below the tie down studs. Since then most shear wall testing has switched from bolted tie down brackets to nailed or screwed brackets. In some cases the brackets have also been heavily reinforced. Nailed and screwed brackets have been reported to have negligible slip (Commins and Gregg, 1996; Dolan, 1996), although bracket deformation and crushing of sills are still allowing some movement. Commins and Gregg (1996), using a commercially available nailed tie-down, reports an uplift slip of about 1/4 inch, and a downward sill crushing of up to 1/4 inch, both at the wall's ultimate capacity.

Tests of eight-foot by eight-foot walls for APA Report 158 (APA, 1996) used tie-down brackets fabricated from C3 steel channels, with shear plate connections dapped into the tie-down posts. These tie-down brackets had been fabricated for earlier tests at UC Irvine. APA reported these tie-downs had less than 0.03 inch movement at design loads and 0.07 inch at wall ultimate capacities. It should be noted that in the APA testing, with the tie-down slip essentially eliminated, wall failure due to unfastening of the sheathing started to occur at the panel corners. The corners are where fasteners are subject to the highest forces and strains because the difference in the preferred strain distortions between the framing and sheathing is maximized there.

Testing of tie down brackets by their manufacturer has historically involved the bracket being installed against a steel side plate, with the load applied through a steel member at the bracket seat. The intent of this test set-up is to demonstrate the capacity of the bracket irrespective of the wood to which it would be attached. Code allowable bolt values have been used to determine the capacity of the bracket connection to a wood post. Since the Northridge earthquake and the ATC R-1 testing, there has been considerable interest in tie down bracket deformation. As a result, some of the major manufacturers now publish tie down bracket deformation values at design load. This deformation, however, is still determined using the steel testing jig, because there is a lack of agreement on the appropriate configuration for testing of a bracket attached to a wood tie-down post.

Proper Design for Tie-Down Capacity

There are two ways to determine the required tie down force at a shear wall chord, and the choice of methods will likely effect the behavior of the shear wall. Designers traditionally apply the calculated design load at the top of the wall, determine an overturning moment based on the height of the wall, and use the code-permitted 85 percent of the vertical dead load to the wall to determine the resisting moment. This method provides what can be described as a "design force level" tension or compression force in the chord member. However, the chord may be able to develop a much larger force, depending on the edge fastening of the sheathing. For example, if the design force results in 500 pounds per foot (plf) shear in the wall, the designer can choose to provide any combination of sheathing and fastening that exceeds this demand. Normally the selection is based on the next highest available capacity from UBC Table 23-II-I-1. If the project is using 15/32 inch thick wood structural panels, the selection would be 10d nails at 3 inch edge spacing. This provides the wall with extra in-plane shear capacity equal to 600 plf. Because the edge nailing is also the nailing along the chord, the chord can experience larger forces commensurate with the nailing capacity actually provided, rather than be limited to a "design" level of force.

If the design of the tie down is based on the calculated "design" tension force rather than the actual shear wall "capacity" provided, the tie down could have a much smaller capacity than the forces the chord member is likely to receive. One way to prevent the tie down from having less capacity than the chord can develop is to determine the tie down demand using the full capacity of the shear wall as the "design" lateral load when determining the overturning force. In this case 600 plf would replace 500 plf in the determination of the overturning and the tie down demand would increase proportionally. The premise in using this approach is that the elements transferring forces into and out of shear walls should be balanced to match the maximum capacity of the wall, rather than the smaller "design" force the calculations predict for the wall. Depending on the wall height-to-width ratio, the difference in the actual magnitude of the tie down demand force will vary. However, if the wall is only 4 feet long, and the dead loads are assumed to be 100 plf, the required tie-down demand in the example above will be 800 pounds greater when using the shear wall capacity, than when using the smaller design force.

B. Resolution of Issues Relating to Boundary Members

For Designers

The most problematic connection in shear walls is the tie down of the tension chord. Various installation errors can seriously effect the ability of the tie down device to perform one of its most important functions—limiting drift. The selection of the tie down hardware to be used can also effect the performance. Generally, tie-downs using nails, or ductile screws specifically designed for the product, will have less slip potential than those using bolts; however, bolted connectors may be the only choice for very large tension loads.

When detailing shear walls, be certain to show the relationship between the end studs normally installed at the sheathing panel ends and the post that will form the chord member. Do not assume that the chord members will automatically receive the edge nailing needed to transfer chord forces.

For Plan Check Engineers

The current UBC has no preference or limits on the type of tie-down anchorage that can be used as long as it can provide the capacity necessary to resist the calculated load. The issue of drift caused by tie down device slip is not yet a criterion that must be evaluated or accounted for in by the designer for determining story drifts.

When a shear wall design uses piers along the openings in walls instead of full story height wall elements, an analysis should be provided to determine the necessary continuity connections to be provided along the boundary of the pier and the edges of the openings. Those connections (e.g., straps, blocking) should be clearly detailed on the drawings.

For Inspectors

All tie down brackets need to be thoroughly inspected. Oversized bolt holes in wood posts, loose nuts on the top of threaded rods extending between tie-downs in adjacent stories or into the foundation need to be re-tightened just prior to closing up the walls to compensate for wood shrinkage. Substitution of tie-down hardware other than what is specified on the drawings should not be approved without the designer's specific acceptance of the substitution.

The shear wall stud or post to which a tie down is attached, is the correct member (chord) to receive the edge nailing of the shear wall's sheathing. When inspecting sheathing nailing be sure to look at the other side of the wall to verify that the edge nailing is into the correct framing member. When edge nailing does not occur into this chord member the shear wall will not perform properly during an earthquake and damage to the shear wall and other parts of the building can occur.

2.2.6 Penetrations

Issues and Concerns. When not properly designed and constructed, shear wall penetrations can significantly reduce the performance of the shear wall and the structure as a whole. Penetrations that should be considered include those through the sheathing, as well as through the studs, particularly studs at panel joints. Sill plate and top plate penetrations are also a concern.

A. Discussion and Examples

Sheathing Penetrations

The structural significance of penetrations varies depending on the size of the penetration with respect to the shear-wall length.

Shear-wall penetrations of up to about six inches, if placed near the center of a sheathing panel, have little or no effect on the shear-wall capacity. Except for special, high-load shear walls calculated using principles of mechanics, the capacity of the shear wall is controlled by the sheathing fastening. A small penetration at the center of the sheathing panel that does not result in disruption of sheathing nailing should not impact the shear-wall capacity. As the penetration gets larger or closer to the sheathing edge, the situation changes.

In general, it is a good practice to provide blocking with sheathing edge fastening

around a shear-wall penetration. Special detailing for penetrations is often specified when the larger dimension exceeds twelve to sixteen inches. The required detailing for such penetrations is the same as previously discussed for shear walls designed for continuity around openings. Strapping and blocking along each edge of the opening would typically be provided. Alternately, a shear wall with a large opening can be designed as two full-height shear walls, one on each side of the opening.

Framing Penetrations

The following conditions are likely to occur both in new construction and when retrofit work is being performed on existing buildings, where electrical, plumbing, mechanical and fire protection piping systems penetrate shear walls.

- Stud Penetrations. One difficulty with stud framing occurs when it is necessary to add new studs into existing walls. Electrical wiring is often threaded through holes bored at mid-depth of the studs. If the existing wiring is slack it may be possible to install a stud behind it, and push the wire into a slight notch in the stud with a steel protection plate over it. Where the existing wiring is tight, it will be necessary to disconnect the wiring at the nearest junction box, place the new stud with a bored hole, and re-thread the wire.

- Foundation Sill Penetrations. Where shear walls also serve as plumbing or utility walls, piping or conduit extending from the slab into the shear wall usually result in large notches taken out of the foundation sill plate, or complete sections of the sill that are removed. In these cases there is no framing member to which the sheathing bottom edge can be fastened, and there is little continuity in the sill plate. The UBC requires each section of sill to have two anchor bolts, and also requires that the bolt be located a minimum of seven bolt diameters away from the sill end. When a shear wall sill has been cut away so that it only consists of a series of pieces six to ten inches long, the code requirements can not be met. See Figure W2-14.

- Disruption at Through-Floor Shear Transfer. Existing buildings commonly have pipes and ducts running in the floor cavity between floor framing members. When these pipes and ducts must pass above a shear wall, the blocking above the wall top plate is left out or reduced in size. This results in a reduced length for shear transfer from the wall above to the wall below. For lightly loaded shear walls, the missing transfer capacity

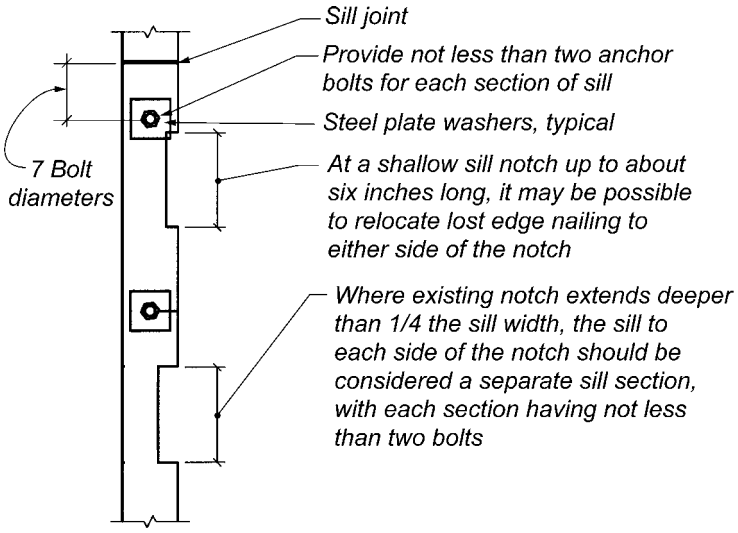

Figure W2-14 Foundation sill penetrations

usually can be replaced in other joist bays. However, the loss of shear transfer length becomes a significant problem at interior wall lines where loads and required capacity are generally much larger. Elimination or reduced lengths of blocking or joists providing shear transfer should be reviewed by the building designer and the appropriate revisions made either to reduce the wall's design capacity or to provide a supplemental transfer connection to replace the missing shear transfer.

B. Resolution of Issues Relating to Penetration

For the Designer and Plan Check Engineer

Penetrations through shear-wall framing, even if fairly small, are usually more critical than small openings in the sheathing only. Sill and top plate penetrations for piping and ducts should be specifically detailed because these types of penetrations occur in nearly all buildings. Limits on the lengths of missing pieces of sill and plates must be established, and then specific adjustments for edge fastening of sheathing on either side of those locations should be specified when the spacing is smaller than the openings.

The code does not require the design of shear-wall chord tie downs to provide a capacity equal to the overturning that would result if the wall was loaded to its full in-plane capacity, when a smaller "design" load has been calculated and assigned to that wall. However, the use of the design load to determine the tension chord tie down capacity can result in the tie-down being overloaded, because the wall fastening doesn't know it is only supposed to transmit the smaller design load. Balancing of shear wall in-plane capacity with the restraint provided for overturning is a more prudent choice.

For the Inspector

Penetrations through shear wall framing members that receive edge fastening (sills, panel edge studs and top plates) should not be large enough to alter the spacing or reduce the required number of edge fasteners. Missing pieces of sill plate create the same problem but the sill plate situation is particularly critical at the foundation, where each piece should have two sill bolts. Penetrations that interfere with placing sheathing edge fasteners or sill bolting must not be approved without a method of replacing the edge nails or bolts at other locations so that the total capacity remains the same. The closer the nail edge fastener spacing the more critical this issue becomes.

2.2.7 Cripple Walls

Issues and Concerns. There are some special issues that need to be addressed for cripple walls, whether they are of engineered or conventional construction. The cripple wall, located between the lowest floor framing and the top of the foundation, is a vital part of the load path that has been a major earthquake weakness in older construction.

At cripple walls, sheathing is generally only provided on one face of the wall, and the cripple walls are often only located along perimeter walls. This results in far less redundancy and capacity than occurs at occupied floor levels where numerous interior walls occur. This is compounded by the fact that the lowest floor diaphragm imparts even more lateral force into those cripple walls than a similar amount of walls on the first main story level.

Extensive damage to residential cripple walls was observed in the 1994 Northridge earthquake. As a result, the 1997 UBC requires more length of prescriptive bracing and the prescriptive bracing is limited to wood structural panels. While the UBC has not made the limitation of using only wood structural panels as cripple wall bracing mandatory for engineered buildings, it is highly recommended.

See Section 2.5, Irregular Configurations, for a discussion of stepped cripple walls in buildings constructed on sloping sites.

2.2.8 References Resources

APA, 1996, *Wood Structural Panel Shear Walls*, APA-The Engineered Wood Association, Report 154,Tacoma, Washington.

APA, 1994, *Northridge, California Earthquake*, APA-The Engineered Wood Association, Report T94-5, Tacoma Washington.

APA, 1999, *Wood Structural Panel Shear Walls With Gypsum Wall Board and Window/Door Openings*, APA-The Engineered Wood Association, Report 157, Tacoma, Washington.

APA, 1998, *Preliminary Testing of Wood Structural Panel Shear Walls under Cyclic (Reversed) Loading*, APA-The Engineered Wood Association, Report 158, Tacoma, Washington.

ATC, 1995, *Cyclic Testing of Narrow Plywood Shear Walls*, Applied Technology Council, Report R-1, Redwood City, California.

BSSC, 1997, *NEHRP Recommended Provisions for Seismic Regulations for New Buildings and other Structures*, prepared by the Building Seismic Safety Council, published by the Federal Emergency Management Agency, FEMA Reports 302 and 303, Washington D.C.

Commins, A., and Gregg, R., 1996, *Effect of Hold-downs and Stud-Frame Systems on the Cyclic Behavior of Wood Shear Walls*, Simpson Strong-Tie Co., Pleasanton, California.

Dolan, J.D., 1996,, *Experimental Results from Cyclic Racking Tests of Wood Shear Walls with Openings*, Timber Engineering Report No. TE-1996-001, Virginia Polytechnic Institute and State University, Blacksburg, Virginia.

Dolan, J.D. and Heine, C.P., 1997, *Monotonic Tests of Wood-frame Shear Walls with Various Openings and Base Restraint Configurations*, Timber Engineering Report No. TE-1997-001, Virginia Polytechnic Institute and State University, Blacksburg, Virginia.

Dolan, J.D. and Heine, C.P., 1997, *Sequential Phased Displacement Cyclic Tests of Wood-frame Shear Walls with Various Openings and Base Restrain Configurations*, Timber Engineering Report No. TE-1997-002, Virginia Polytechnic Institute and State University, Blacksburg, Virginia.

Dolan, J.D. and Heine, C.P., 1997, *Sequential Phased Displacement Tests of Wood-frame Shear Walls with Corners*, Timber Engineering Report No. TE-1997-003, Virginia Polytechnic Institute and State University, Blacksburg, Virginia.

EERI, 1996, "Northridge Earthquake of January 17, 1994, “Reconnaissance report," *Earthquake Spectra*, Earthquake Engineering Research Institute, Oakland, California.

Ficcadenti, S.J., T.A. Castle, D.A. Sandercock, and R.K. Kazanjy, “Laboratory Testing to Investigate Pneumatically Driven Box Nails for The Edge Nailing of 3/8”-Thick Plywood Shear Walls,” *Proceedings, 64th Annual Convention*, Structural Engineers Association of California, Sacramento, California.

Foliente, G.C., 1994, *Analysis, Design and Testing of Timber Structures Under Seismic Loads*, University of California Forest Products Laboratory, Richmond, California.

Foliente, G.C., 1997, *Earthquake Performance and Safety of Timber Structures*, Forest Products Society, Madison, Wisconsin.

Hamburger, R.O., 1995, "Lessons learned in the Northridge earthquake on wood frame buildings," *Northridge Earthquake: Lessons Learned*, 1994 Spring Seminar, Structural Engineers Association of Northern California, San Francisco, California.

ICBO, various editions. *Uniform Building Code*, International Conference of Building Officials, Whittier, California.

Mendes, S., 1995, "Wood diaphragms: rigid versus flexible inappropriate

assumptions can cause failure of shear walls," *Proceedings, 56th Annual SEAOC Convention*, Structural Engineers Association of California, Sacramento, California.

Schierle, G.G., 1993, *Quality Control In Seismic Resistant Construction*, (Report to the National Science Foundation), Department of Architecture, University of Southern California, Los Angeles, California.

SEAOC, 1991, *Reflections on the Loma Prieta Earthquake October 17, 1989*, April, Structural Engineers Association of California, Sacramento, California.

SEAOC, 1997, *Seismic Detailing Examples for Engineered Light-Frame Timber Construction*, Structural Engineers Association of California, Sacramento, California.

SEAOC, 1997, *Guidelines for Diaphragms and Shear Walls*, Sacramento, Structural Engineers Association of California, California.

SEAOC, 1996, *Cyclic (Reversed) Load Test for Shear Resistance of Framed Walls for Buildings*, Structural Engineers Association of Southern California, Ad Hoc Committee-Testing Procedures,, Whittier, California.

Zacher, E.G. and R.G. Gray, 1985, "Dynamic tests of wood framed shear panels," *Proceedings, 54th Annual SEAOC Convention*, Structural Engineers Association of California, Sacramento, California.

2.3 Connections between Seismic Elements

The objective of this section is to enable designers, plan-check engineers and inspectors to visualize the complete load path in wood-frame construction and to explain the details of typical connections occurring along that path from the roof level to the foundation.

Diaphragms and shear walls alone are not able to resist seismic forces without proper connection. Each portion of a building generates a seismic force that needs to be transmitted through a defined load path to the building foundation. This load path is achieved by taking the following steps.

- Connecting each building portion to a diaphragm or shear wall
- Providing connections between diaphragms and shear walls
- Connecting shear walls between story levels and to the foundation

This section 2.3 discusses the last two types of connections listed above, linking the two primary lateral-force elements (diaphragms and shear walls) discussed in Sections 2.1 and 2.2.

Wood-frame construction contains a wide variety of seismic load path connections. This section discusses and depicts with drawings some examples of typical connections. Because the load path contains so many connections, Section 2.3 is divided into the following three categories of connection locations.

- Roof diaphragm connections to top-story shear walls
- Upper-story shear-wall connections to a floor diaphragm and to lower-story shear walls
- Bottom-story shear-wall connections to the foundation.

In addition, this section also discusses special design forces for connections when shear walls are not vertically continuous between story levels.

2.3.1 Roof to Wall Connections

Issues and Concerns. The roof diaphragm must be properly connected to top-story shear walls. The connection conditions occurring along exterior wall lines are different from those occurring at interior shear-wall locations. The direction of roof framing relative to the shear walls below (parallel or perpendicular), and the height of exterior and interior walls relative to the roof framing also create conditions that must be specifically detailed on drawings. Retrofit considerations include adding new framing members and adding fastening between the roof sheathing and framing without disturbing roof coverings.

A. Discussion and Examples

Roof Diaphragm Connections *to Exterior Walls*

Figure W2-15 shows a roof eave condition that is very common. In the figure, Item 1 is the diaphragm sheathing edge or boundary fastening to the eave blocking. Item 2 is the blocking fastening to the top plates. Items 1 and 2 complete the roof sheathing fastening to the diaphragm boundary member. Item 3 is the shear-wall sheathing fastening to the double top plates, which completes the diaphragm-to-shear-wall load path.

2.4 Foundation Systems

The objective of this section is to provide an overview of typical foundation types and the function of the foundation in the load path.

Issues and Concerns. Foundation systems provide the final link in a building's lateral load path. Anchorage of shear walls or frames to the foundations provides the interface between the building's resisting system and the ground.

A. Discussion

Seismic forces are resisted at the base of wood shear walls by foundation components (see Figure W2-43). Because it is the final link in the load path to the soil, the behavior of the foundation affects the response of the building. There are two types of foundations used for wood buildings, shallow (see Figure W2-44) and, less commonly, deep (see Figure W2-45). Shallow foundations are those that are supported by the vertical pressure of the earth directly below. These can be square or rectangular spread footings placed beneath individual columns, or continuous rectangular footings below walls. Deep foundations used for wood buildings usually are a consequence of poor soil conditions and most often will consist of concrete piers that have been drilled and poured in place. Piers are supported vertically by a combination of skin friction along their length and bearing at their bottom end. Footing components are often connected together by grade beams and slabs-on-grade. Where anchors such as sill bolts or shear-wall tie-down rods need to be embedded into the foundation, it is important to consider the sequencing of the pour and where cold joints may occur to determine the correct length for the anchor bolts or rods. Lateral forces are transferred to foundation components from walls and frames through those connections. Overturning forces require dowels or bolts from the footings to connect to the tension chord members at the ends of wood shear walls. Great care should be exercised in the field to make sure that these are correctly located.

Lateral forces are transmitted out of the building to the soil by two mechanisms. Horizontal friction occurs on the bottoms of shallow footings and slabs. If the seismic forces are larger than the frictional capacity, the building is additionally restrained from movement by passive soil pressures acting on the vertical face of footings, grade beams, piles/piers, basement walls, and other foundation components. Overturning forces on shallow foundations are resisted by a redistribution of the pressure supporting the vertical loads. In very strong earthquakes these can reach the limit of the restoring capability of the building and rocking can occur. This is not always a bad

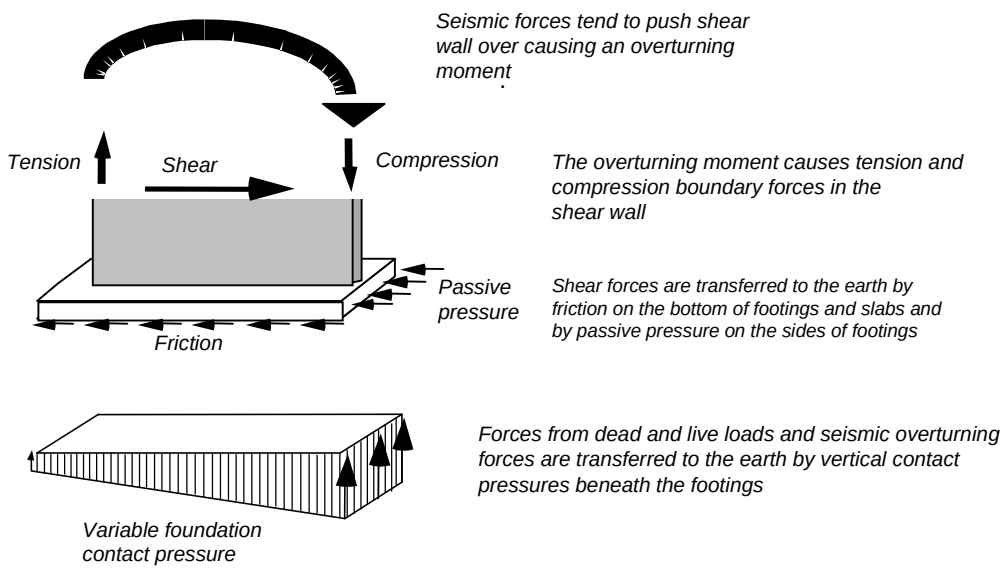

Figure W2-43: Earthquake forces on foundations

phenomenon, since it limits the forces that the building sees. Overturning in deep foundations causes an increase in some pile and pier loads and a decrease in others. In fact, the initial compression in some locations might be overcome, resulting in pile or pier tension.

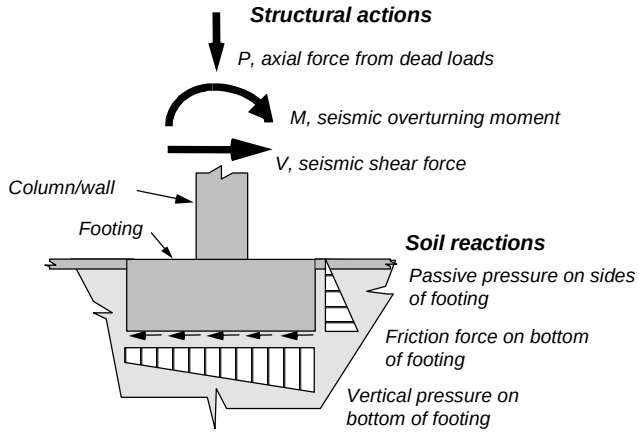

Figure W2-44: Shallow foundation

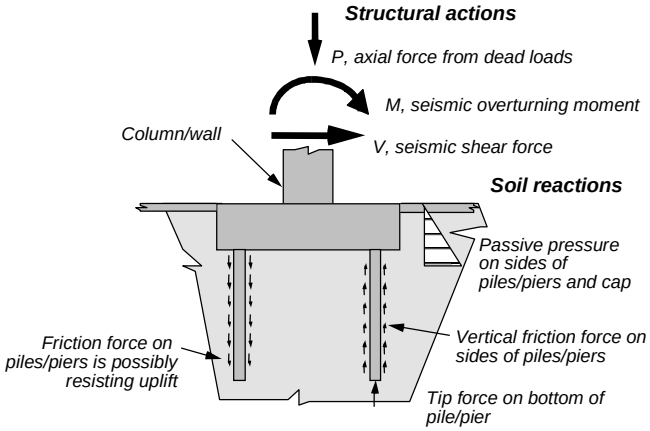

Figure W2-45: Deep foundations

In past earthquakes, observed damage to foundations primarily has been due to lateral soil movements such as block sliding initiated by liquefaction. The effects of this type of damage can be reduced by tying foundations together. Common retrofitting measures for this purpose include the installation of grade beams between footing elements. Sometimes existing spread footings are widened to provide increased bearing resistance. Drilled piers or driven piles can be installed.

B. Resolution of Foundation Issues

For designers

The force-deformation characteristics of foundations and soils can greatly influence structural behavior particularly for shear wall buildings. The expert advice of a qualified geotechnical engineer is often necessary for design. Also, field verification of foundation conditions and inspection of construction by the geotechnical engineer can be critical. This is especially true for additions to existing foundations that may requiring jacking or underpinning of foundation elements.

For Plan Check Engineers

Make sure that the drawings and calculations specify the source of information on soil conditions. Should a geotechnical investigation be required? Do the contract documents require inspection of foundations by a geotechnical engineer? Should they?

For inspectors

Make sure that the required inspections by the geotechnical and structural engineers are made. In some cases the geotechnical engineer should be present during excavation and installation. Prior to pouring of spread footings make sure that excavations are clean, dry, and free of loose soil material. Proper reinforcing should be secured in place and forms should be level, plumb, and securely braced. Check the drawings to make sure that embeds and anchor bolts are installed and secured in proper locations.

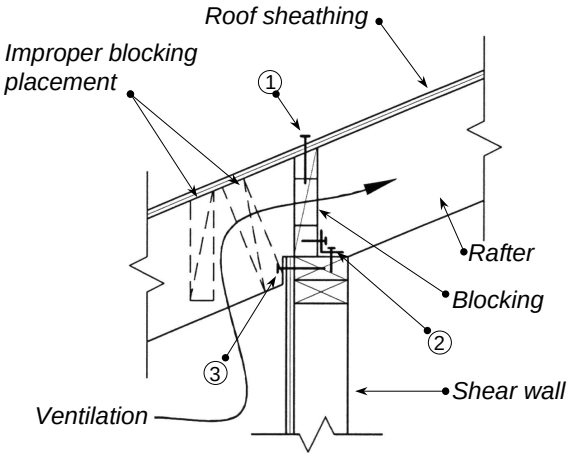

Notes:
1. Roof diaphragm sheathing edge or boundary fastening to blocking
2. Blocking fastening to top plates
3. Shear-wall sheathing fastening to top plates

Figure W2-15 Roof connection to exterior wall at eave

As simple as this connection may seem, it is often improperly constructed. One reason is that rafter blocking is often placed outside the vertical plane of the shear wall. When this occurs, connections 1 and 2 cannot be properly made. If this blocking location is desired for appearance purposes, another set of blocking must be provided for the structural connection. A second common reason for improper construction is that blocking is left out all together to provide for attic ventilation. The area of required ventilation opening needs to be calculated and the blocking either bored or notched for the required area. Coordination is needed between the engineer and architect to ensure that the bored or notched blocking can still accommodate the required connections 1 and 2. A third common misconstruction is the installation of square-topped blocking at a sloped roof, where the blocking only makes contact with the roof sheathing at the outside edge. This results in the roof sheathing fastening being installed across an air gap, resulting in a loss of strength and allowing deflection to occur through bending of the fastener. The top of the blocking needs to be cut to match the roof sheathing slope.

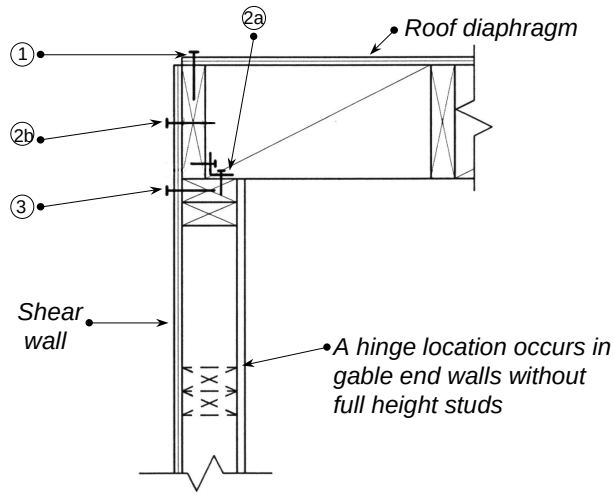

Notes:
1. Diaphragm sheathing edge or boundary fastening to rim rafter
2a. Rim rafter fastening to top plates OR
2b. Shear-wall sheathing edge fastening to rim rafter
3. Shear-wall sheathing edge fastening to double top plates

Figure W2-16 Roof connection to exterior wall at gable end

Figure W2-16 shows a gable end or non-bearing exterior wall configuration. Item 1 is diaphragm sheathing edge or boundary fastening to the roof framing. Item 2 can be either a connection from the rim rafter to the top plates (2a) or wall sheathing edge nailing to the rim rafter (2b). Item 3 is wall sheathing fastening to the top plates. A concern related to gable end walls at sloping roofs, and particularly at cathedral ceilings, is noted on the figure. Where full height studs are not used, the double top plate (shown dashed) becomes a horizontal beam supporting the wall for out-of-plane forces. The double top plates are seldom strong or stiff enough to span to adjacent, perpendicular walls. This condition should be avoided by providing full height studs.

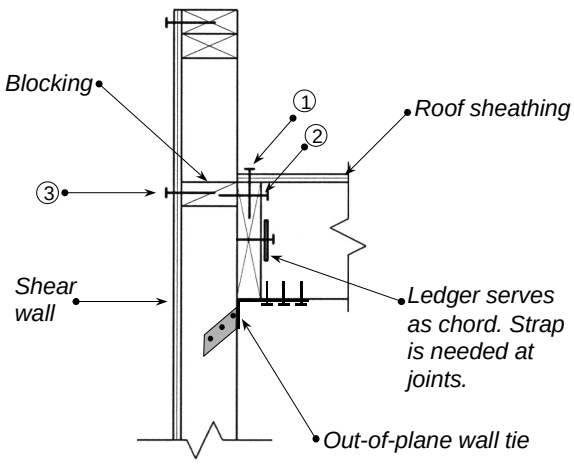

Notes:
1. Diaphragm sheathing edge or boundary fastening to ledger
2. Ledger fastening to wall blocking
3. Shear-wall sheathing fastening to wall blocking

Figure W2-17 Roof connection to exterior wall at balloon-framed studs

Figure W2-17 shows a configuration at parapet walls extending above the roof. Parapet wall studs are often balloon framed instead of platform framed, and the roof framing is supported on a ledger on the interior face of the wall. This may occur either on a bearing or non-bearing wall. Item 1 is diaphragm sheathing edge or boundary fastening to the roof ledger. Item 2 is ledger shear fastening to blocking between wall studs. This fastening is in addition to ledger fastening to the studs for vertical loads. Item 3 is shear-wall sheathing fastening to the wall blocking. An incomplete load path commonly occurs in this configuration when the wall blocking and fastening Items 2 and 3 are not provided. Two reasons for this omission are that the blocking is usually unnecessary for vertical loads and the horizontal joint in the wall sheathing may not occur at this level. In this configuration, the ledger serves as the roof diaphragm chord and collector. Straps or other splice fastening must be provided at joints in the ledger. In addition to the shear connection shown, the studs will need to be connected to the roof framing for out-of-plane wall forces.

Figure W2-18 shows another possible configuration at building parapet walls. This configuration involves the wall being platform framed to the roof level, and the parapet studs being lapped with and fastened to rafters. A neat notch needs to be made in the roof sheathing at each parapet stud. It is important that these notches not be over-cut. Item 1 is diaphragm sheathing edge or boundary fastening to the blocking between studs. Item 2 is wall sheathing fastening to the blocking, and Item 3 is wall sheathing fastening to the double top plates.

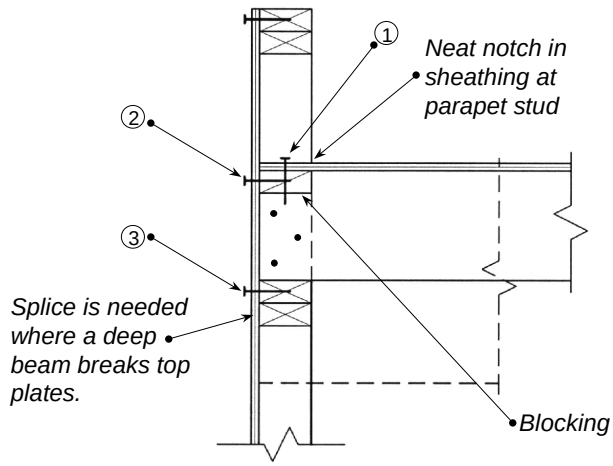

Notes:
1. Diaphragm sheathing edge or boundary fastening to blocking
2. Shear-wall sheathing fastening to wall blocking
3. Shear-wall sheathing fastening to top plates

Figure W2-18 Platform-framed wall with lap-spliced parapet stud

Another common condition is illustrated in Figure W2-18, but can also occur in either Figures W2-16 or W2-17. When roof or ceiling beams framing into a wall are deeper than the rafter depth, the bottom of the beams will interrupt the continuity of the top plates of the wall. Because the top plates typically serve as both a diaphragm chord and a collector, a splice connecting the top plates on either side of the beam is required.

Roof Diaphragm Connections to Interior Walls

Interior shear walls that extend all the way to the roof without interruption by ceilings or deep roof framing members will look very much like the exterior shear walls shown in Figures W2-15 and W2-16. Figure W2-19, W2-20, W2-21, and W2-22 illustrate some additional configurations at interior walls. These configurations can also occur at exterior walls where there is a significant roof overhang beyond the exterior wall.

A serious load path deficiency commonly occurs at interior shear walls. Interior shear walls must extend through attic spaces and be connected to the roof diaphragm. However, in some cases the wall framing is simply stopped at the finished ceiling level, or the studs may continue to the roof but are not sheathed. Interior shear walls constructed in that manner are completely ineffective in resisting earthquake forces because no load path exists to deliver forces from the roof to the wall. Figure W2-19 shows this condition. The dashed lines show the shear-wall extension that was probably envisioned during the design, but not constructed. Another issue that is often not specifically addressed on drawings is the length of attic shear wall required. Was it to match only the length of the shear wall below, or was it envisioned as extending the full length of the roof diaphragm? The designer must clearly indicate the length and detailing of attic shear walls on the drawings, and the contractor and inspector must ensure that the attic shear walls are constructed.

Figure W2-20 shows a similar condition using metal-plate roof trusses. The comments above regarding Figure W2-19 also apply to Figure W2-20. In addition this attic shear wall will have to be constructed as a series of two-foot-long in-fill panels between the trusses, as shown in Figure W2-21. This is tedious construction that needs to be thoroughly detailed and carefully inspected. Figure W2-21 shows typical required fastening.

Figure W2-22 shows a configuration commonly occurring at walls between multifamily dwelling units where a shear wall has a truss directly above. If the truss has diagonal web members, it is possible to have the truss designed by the manufacturer to transfer the in-plane seismic force from the roof sheathing to the top plates. If this is the case, the fastening needed is Item 1, the nailing of the roof sheathing to the truss top chord, Item 3 the fastening of the truss bottom chord to the shear-wall top plates, and Item 4, the fastening of the shear-wall sheathing to the top plates.

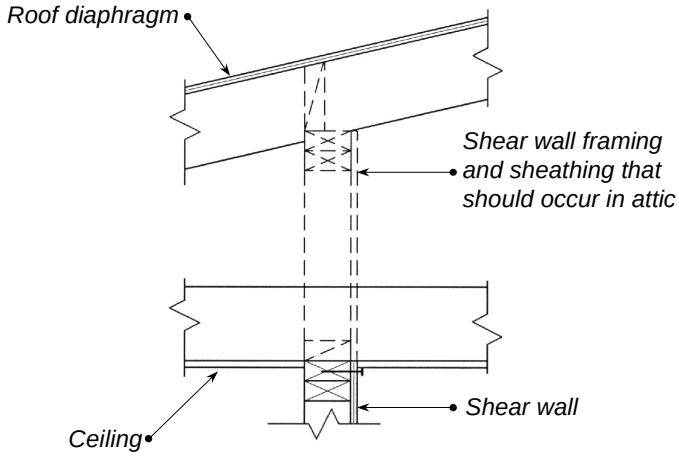

Figure W2-19 Missing attic shear-wall extension

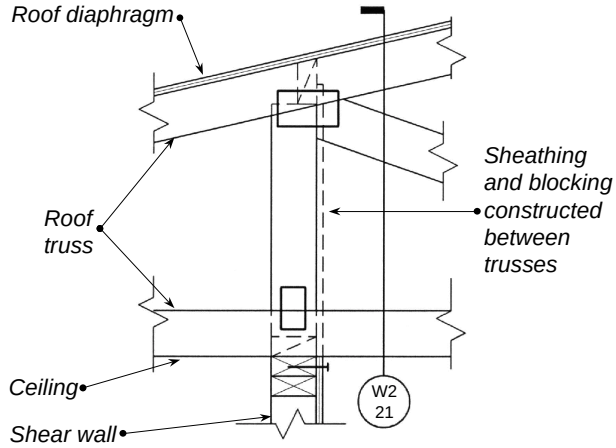

Figure W2-20 Attic shear wall between trusses

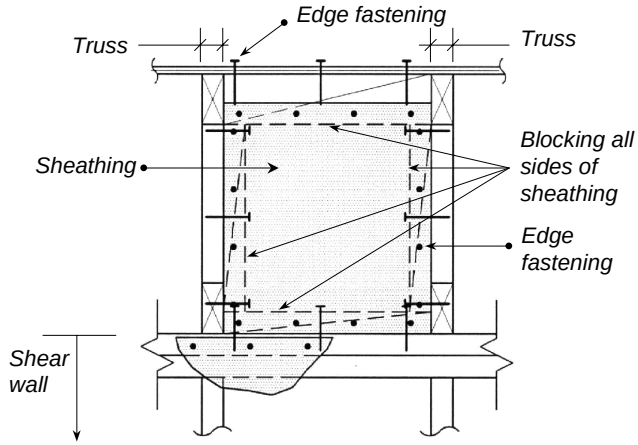

Figure W2-21 Elevation view of attic shear wall between trusses

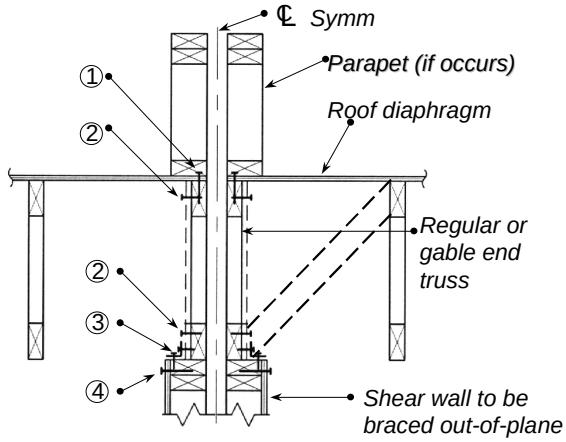

Notes:

1. Diaphragm sheathing edge or boundary fastening to truss top chord
2. Attic shear-wall sheathing fastening to truss top and bottom chords
3. Attic shear-wall angle clips to top plates
4. Shear-wall sheathing edge fastening to top plates

Figure W2-22 Attic shear walls at walls separating two dwelling units

If a gable end truss does not have diagonal web members the truss will need to be sheathed. Item 2 is sheathing fastening to the truss. If the gable end truss is more than six feet tall, the 2x flat web members will be too slender to carry shear-wall compression forces. This can be solved by connecting two trusses or by providing out-of-plane bracing of the vertical members in the truss. In either case special details are needed. Out-of-plane bracing for the top of the shear wall must also typically be provided.

Roof-to-Wall Retrofit Issues

One situation commonly encountered in retrofit work is that a new connection is needed between framing at the top of a shear wall and the roof diaphragm sheathing. It is most desirable to have this fastening accomplished when the weatherproof roofing is removed, allowing fasteners to be installed through the roof sheathing and into the framing below (Figure W2-23(a)). When this connection is not feasible an alternative method of fastening that can be placed without disrupting the roofing is required.

Figure W2-23(b) shows an alternative fastening method using a structural adhesive to connect a new piece of blocking to the underside of the roof sheathing. This type of fastening method has been criticized because adhesive connections are considered nonductile and typically fail suddenly rather than gradually yielding. However, if a reasonable portion of other connections between the diaphragm sheathing and roof framing are made with ductile connections (nails, staples), the limited use of adhesive could be acceptable. Another approach might be to design and provide the adhesive connection's capacity based on a magnified demand force calculated using the 1997 UBC special seismic load combination equations. This extra capacity could allow the adhesive connection to behave acceptably well after the ductile connections begin to yield. Care must be taken when installing the adhesive. Items of interest to inspectors are adequate spreading of the adhesive over the surface to be adhered and placement of the member to be adhered before the adhesive sets.

Figure W2-23(c) shows an alternative fastening method using wood screws. It is recommended that this only be used for very light loads, and only when other types of fastening cannot be used. The connection is made using a light-gage steel angle that is fastened to the roof sheathing with wood screws. The National Design Specification (NDS) requires that wood screws have not less than four diameters of penetration into the member receiving the point. Eight diameters penetration is required to develop the full design capacity of the screw. In order to achieve four diameters of penetration into ½-inch-thick sheathing it is necessary to use no larger than a number four wood screw. This very small diameter screw has a very small capacity, similar to a 6d nail. In addition the allowed capacity is further reduced by one half at four diameters penetration. This results in a very large number of screws being required for any substantial loads.

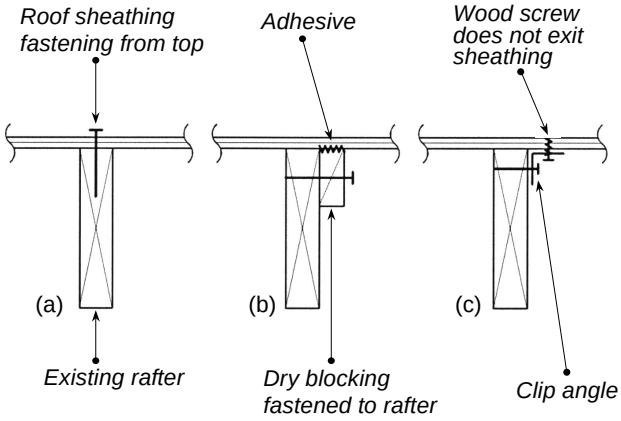

Figure W2-23 Alternative retrofit connections for roof sheathing to framing

B. Resolution of Issues Relating to Roof-to-Wall Connections

For Designers

Provide sufficient details of both typical and special conditions to describe fully how to construct the necessary load path for the transfer of forces from roof diaphragms to shear walls. Clearly show the intended extension of interior shear walls through an

attic space and framing conditions at parapet walls and gable end walls. Providing a minimum number of typical details and using the term "similar" for everything else does not help the builder or inspector when conditions really are not similar.

Coordinate with the architect regarding ventilation openings through eave blocking and with the mechanical and plumbing designer or contractor for ducts and pipes crossing attic shear walls, to ensure the necessary connections will not be omitted or reduced in number.

Specify full-height gable end wall studs or provide adequate details for bracing horizontal top plates occurring below the roof framing level. Evaluate gable end trusses for their ability to transfer in-plane shear forces from the top chord to the bottom chord.

Evaluate the details of typical top plate chord splices to determine their applicability where a deep roof beam interrupts a wall double top plate. Provide a specific splice detail if necessary.

In retrofit projects, carefully consider the ductility of adhesive connections and the allowable capacity of screw fastener connections into sheathing if provided as alternatives to connections using nails or staples.

For Plan Check Engineers

Verify that connection details are provided for the various framing orientations and conditions that exist between the roof and both exterior and interior shear walls. Also, verify that sufficient details or information are provided to allow extensions of interior shear walls through attic spaces to be properly built, particularly where roof framing consists of prefabricated trusses.

Check that the eave blocking ventilation opening sizes specified on architectural drawings do not interfere with or reduce the shear transfer connection capacity provided through that blocking.

At gable end walls verify that the intended stud height is specified or shown on the drawings, and, where gable end trusses are used, that the trusses are designed or specified for in-plane lateral force transfer.

Evaluate the use of adhesive connections and the capacity of screw fastener connections if provided as alternatives to load path connections using nails or staples.

For Inspectors

Locate all shear walls and examine the connection details to the roof along those walls. Examine the drawings carefully to determine how various connection conditions are detailed, because different designers may detail identical conditions differently and because a variety of framing conditions are likely to occur.

Verify that interior shear walls extend through attic spaces or that a specially designed roof truss is provided above the wall to complete the load path from the roof to the wall below. The top of an interior shear wall ending at the bottom chord of a truss should always be provided with bracing perpendicular to the wall.

Make sure that eave blocking is cut to match the roof slope and that attic ventilation openings do not interfere with the intended connections to the blocking.

If gable end walls are not framed with full-height studs make sure the horizontal top plates are adequately braced to ceiling framing. Along cathedral ceilings, full-height gable wall studs should be provided.

Verify that balloon-framed walls with parapets have blocking along the roof framing level with nailing from the roof ledger and from the wall sheathing into that blocking. Also verify that splice connections are provided at joints in the roof ledger.

Where deep roof beams interrupt a wall top plate verify that an adequate splice is provided to connect together the top plates on either side of the beam.

2.3.2 Wall Above to Wall Below Connections

Issues and Concerns. The connection between shear walls in adjacent story levels has two distinct parts. The first is the in-plane shear connection, often referred to as through-floor shear transfer. This involves connecting a shear wall above the floor to the floor diaphragm, and then connecting the floor diaphragm to the shear wall below. The second part of this connection involves transferring the vertical tension and compression forces from the shear-wall chord members above, through the floor, to shear-wall chord members below.

A. Discussion and Examples

Through-Floor Shear Connections

Figures W2-24 through W2-28 show some typical through-floor shear transfer details. Figures W2-24 and W2-26 may apply at both interior or exterior shear walls, where the floor framing is either parallel or perpendicular to the shear wall. Figures W2-25 and W2-27 are sections showing elevations of blocking installation where the joists are perpendicular to the shear wall. In each Figure W2-24 through W2-27 the following items provide the shear transfer load path: Item 1 is shear-wall sheathing edge fastening to the sill plate at the upper wall; Item 2 is fastening of the sill to the joist or blocking; Item 3 is floor diaphragm sheathing fastening to the joist or blocking; Item 4 is joist or blocking fastening to the double top plates; and Item 5 is shear-wall sheathing fastening to the double top plates for the shear wall below.

Figures W2-25, W2-27, and W2-28 show one more connection (Item 6) needed when blocking, instead of a joist, transfers the force through the floor depth. In order for the blocking to be stable it needs fastening to the joist to transfer the vertical component of the force shown by the blocking free-body diagram in the figures. UBC Table 23-II-B-1, which provides conventional construction fastening, does not specifically address this connection, but typical fastening is either three 8d toenails

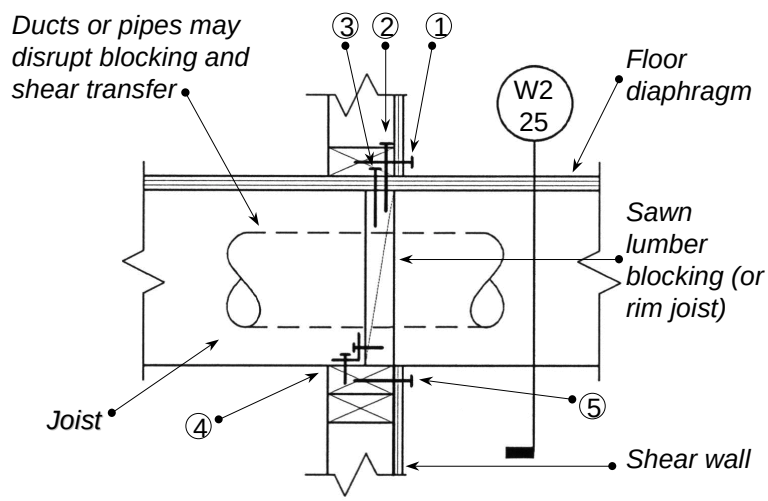

Notes:
1. Shear-wall sheathing edge fastening to sole (bottom) plate
2. Sole plate fastening through floor sheathing to blocking
3. Floor diaphragm sheathing edge or boundary fastening to blocking
4. Blocking angle clip fastening to top plates
5. Shear-wall sheathing edge fastening to top plates

Figure W2-24 Through-floor shear-wall connection with solid-sawn framing

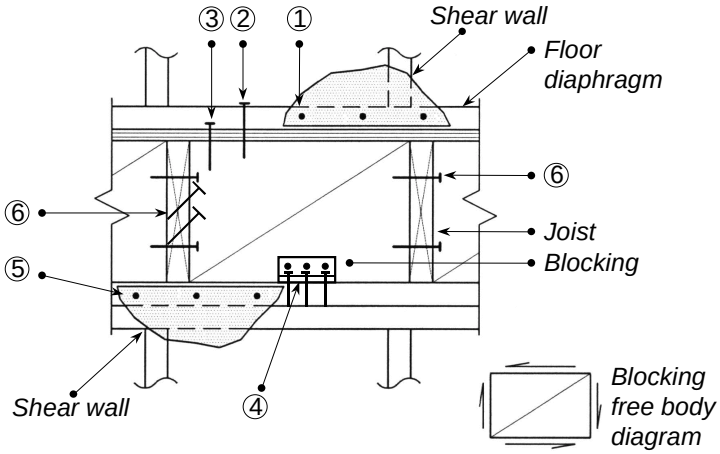

Notes:

1. Shear-wall sheathing edge fastening to sole (bottom) plate
2. Sole plate fastening through floor sheathing to blocking
3. Floor diaphragm sheathing edge or boundary fastening to blocking
4. Blocking angle clip fastening to top plates
5. Shear-wall sheathing edge fastening to top plates
6. Blocking end fastening using end nails, or toe nails

Figure W2-25 Elevation of through-floor shear transfer; solid-sawn framing

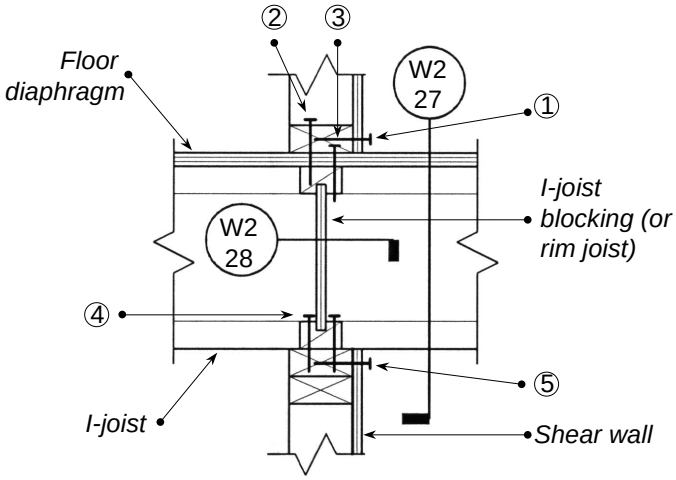

Notes:

1. Shear-wall sheathing edge fastening to sole plate
2. Sole plate fastening through floor sheathing to I-joist blocking
3. Floor diaphragm sheathing edge or boundary fastening to I-joist blocking
4. I-joist blocking bottom chord fastening to double top plates
5. Shear-wall sheathing edge fastening to top plates

Figure W2-26 Through-floor shear-wall connection with I-joist framing

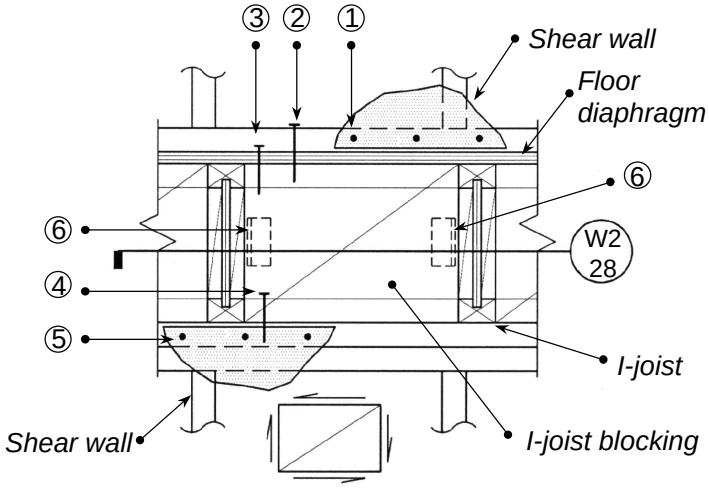

Blocking free body diagram

Notes:

1. Shear-wall sheathing edge fastening to sole plate
2. Sole plate fastening through floor sheathing to I-joist blocking
3. Floor diaphragm sheathing edge or boundary fastening to I-joist blocking
4. I-joist blocking bottom chord fastening to double top plates
5. Shear-wall sheathing edge fastening to top plates
6. I-joist blocking end fastening with angle clips

Figure W2-27 Elevation of through-floor shear transfer; I-joist framing

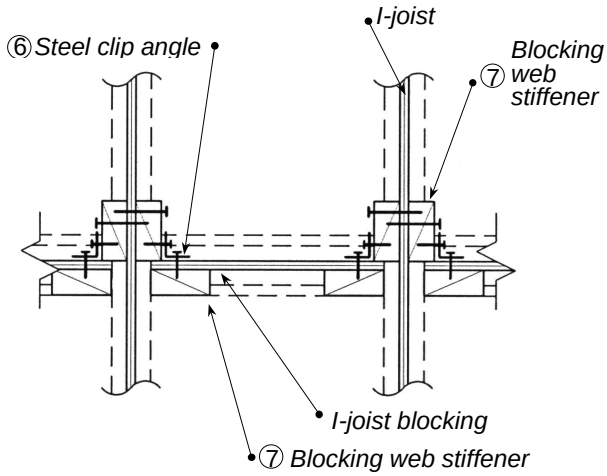

Notes:

6. I-joist blocking end fastening with angle clips
7. Web stiffeners end fastening at angle clips

Figure W2-28 Plan section at through-floor shear transfer

or two 16d end nails. When other than solid rectangular blocking members are being used, the required fastening should be specifically determined. Some special details required for nonrectangular members can be seen in Figures W2-27 and W2-28 which depict I-joists. Similar details would be needed for open-web joists and other proprietary framing members. The manufacturers of these proprietary framing

systems generally publish typical details for shear transfer through the depth of the member, as well as maximum recommended fastening into the top and bottom chord. If too much fastening is applied to these members, the top or bottom chords may split and jeopardize the gravity load carrying capacity of the member as well as the lateral force capacity.

Figure W2-24 illustrates a concern that applies equally to W2-26. Often the through-floor shear transfer will be interrupted by ducts or pipes, which run between joists over the top of the shear wall. This will reduce the number of joist bays that can be used for shear transfer and increase the unit shear in the other bays. Designers usually consider the unit shear through the floor to be the same as the unit shear in the wall below the floor, based on equal shear-wall lengths above and below, and complete through-floor transfer. That assumption is not true where pipes and ducts result in removal of blocking.

Particularly with highly loaded shear walls or those of short length, the removal of blocking needs special design consideration and detailing.

Figure W2-29 shows a through-floor shear transfer approach that is generally only applicable at exterior walls, but can apply with floor framing either parallel or perpendicular. Items 1, 2 and 3 are the same as in the previous figures. Items 4 and 5 are shear-wall sheathing edge fastening to the joist or blocking. The sheathing fastening in Item 1 can be omitted when Item 4 is provided. In order to help mitigate the effects of joist shrinkage, Item 4 fastening is located towards the top of the joist or blocking and Item 5 fastening towards the bottom. A sheathing gap is left at the mid-height of the joist or blocking. This permits the joist or blocking to shrink without forcing the sheathing to buckle outward.

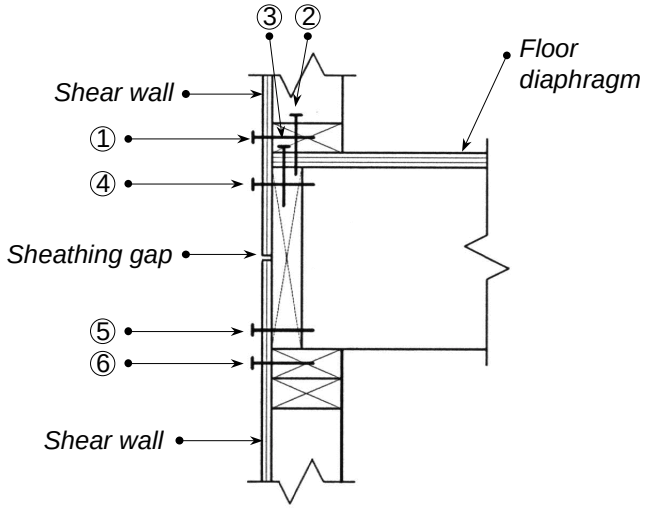

Notes:

1. Shear-wall sheathing edge fastening to sole (bottom) plate may be omitted when item 4 is provided
2. Sole plate fastening through floor sheathing to blocking
3. Floor diaphragm sheathing edge/boundary fastening to blocking
4. Upper shear-wall sheathing edge fastening to rim joist or blocking
5. Lower shear-wall sheathing edge fastening to rim joist or blocking
6. Shear-wall sheathing edge fastening to top plates

Figure W2-29 Exterior wall through-floor shear transfer

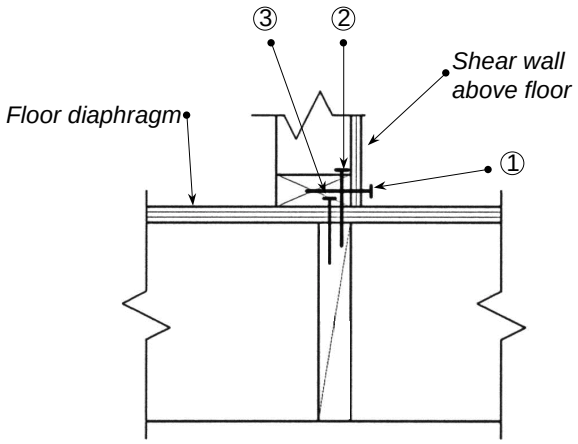

Notes:
1. Shear-wall sheathing edge fastening to sole plate
2. Sole plate fastening through floor sheathing to blocking
3. Floor diaphragm sheathing edge or boundary fastening to blocking

Figure W2-30 Shear-wall connection to floor diaphragm without wall below (discontinuous)

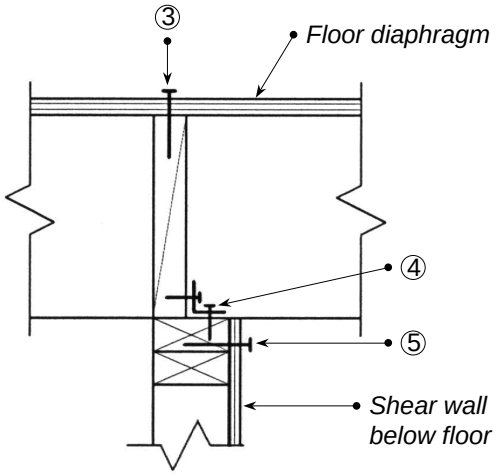

Notes:
3. Floor diaphragm sheathing edge or boundary fastening to blocking
4. Blocking angle clip fastening to top plates
5. Shear-wall sheathing edge fastening to top plates

Figure W2-31 Connection of floor diaphragm to shear wall below

Figures W2-30 and W2-31 show configurations where the shear wall is not continuous above and below the floor. In Figure W2-30, the wall shear is transferred into the floor diaphragm. This is likely to result in a diaphragm area with high forces, as was previously discussed in the Diaphragms section 2.1. Items 1, 2 and 3 are the same as in previous figures. Shear walls that do not continue to lower floors have special design issues. These issues will be covered in Section 2.3.5 Discussion of Design Requirements for Discontinuous Shear Walls. Figure W2-31 is a configuration with a shear wall below only. Items 3, 4 and 5 are discussed with Figure W2-24. Diaphragm edge or boundary fastening occurs at Item 3. It is likely that there is a collector required at this location, in line with the shear wall and extending beyond its end.

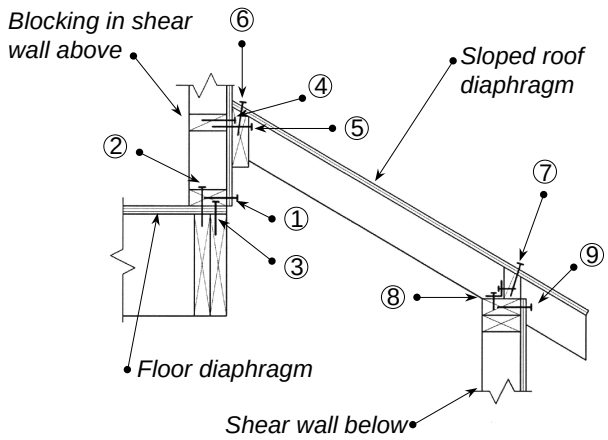

Notes:

1. Upper shear-wall sheathing edge fastening to sole plate
2. Sole plate fastening through floor sheathing to rim joist
3. Floor diaphragm sheathing edge or boundary nailing to rim joist
4. Upper shear-wall sheathing edge fastening to wall blocking
5. Roof ledger fastening to wall blocking
6. Sloped roof diaphragm sheathing edge fastening to roof ledger
7. Sloped roof diaphragm sheathing edge fastening to eave blocking
8. Eave blocking angle clip to top plates
9. Lower shear-wall sheathing edge fastening to double top plates

Figure W2-32 Shear walls above and below offset out-of-plane with discontinuous floor diaphragm

Figure W2-32 shows one type of configuration where it is very difficult to achieve through-floor shear transfer because the shear walls above and below are offset out-of-plane and because the floor diaphragm does not continue to the shear wall below. Items 1 through 9 show the fastening required to complete the load path. Shear forces in items 4 through 9 and in the sloped roof diaphragm will be much larger than usual because they are transferring the floor diaphragm boundary shear to the shear wall below. For design, the most difficult part of this detail involves the development of the roof diaphragm chord members. The roof chord members are sloped, resulting in both horizontal and vertical components. In addition, the roof chord maximum force occurs at the intersection with the upper-story wall, so very special detailing needs to be provided for load path continuity.

Shear-wall Chord Member Connections

Shear-wall chord members, occurring at each end of the shear wall, were discussed in the Shear Wall Section 2.2. The similarity of a shear wall to a cantilever beam was described and illustrated in that section. Shear-wall boundary members are modeled as the beam flanges, with one flange in tension while the other is in compression. One significant attribute of a shear-wall chord is that it is discontinuous and must be spliced at its lower end.

For very small lateral forces, the self-weight of a shear wall along with the dead load supported by the wall can sometimes balance the wall overturning and prevent any calculated uplift or tension load. It is much more common, however, to need tension anchors to resist wall uplift. Compression chord members are required whether or not tension anchorage is required. Shear-wall chord members are generally solid posts or multiple studs.

Figures W2-33 through W2-36 show commonly used tension force connections that are either steel straps or tie-down

brackets connecting shear-wall chords above and below the floor framing. Figure W2-37 and W2-38 show an alternative system that uses a steel rod or cable to tie from the upper wall all the way to the foundation. Figure W2-34, W2-36, and W2-38 show details for the connection of the shear-wall sheathing to the shear-wall boundary member. This was already discussed in the Shear Wall section, but is so important and so often missed in construction that it warrants repeating here. The member to which the tie-down bracket or strap is connected must always have sheathing edge nailing. Often the location of this shear-wall tension chord will not be the very end of the wall and will not correspond to the sheathing edge. The shear-wall tension chord, however, cannot function without this nailing. It is of great importance that this fastening be properly detailed, constructed and inspected. In addition to a compression chord member being provided for the full height of a shear wall, it is also important that adequate compression capacity be provided in the floor framing depth. For lighter compression forces a rim joist or single piece of blocking may be adequate. For the higher compression forces of high capacity shear walls, blocking of a width to match the wall framing is often necessary.

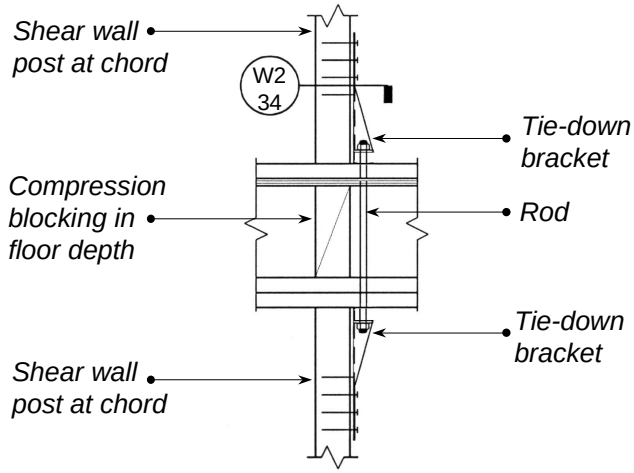

Figure W2-33 Through-floor bracket-and-rod-type tie-down

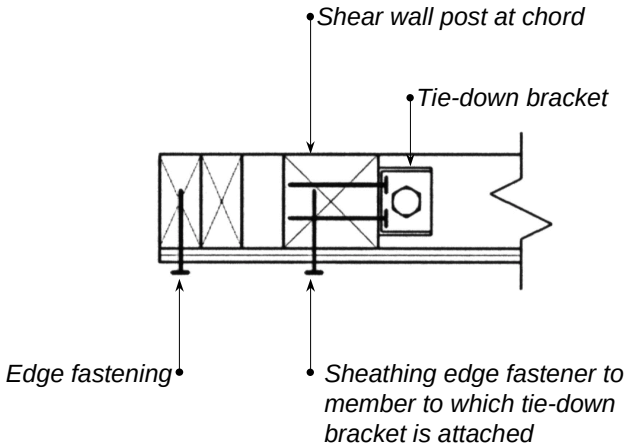

Figure W2-34 Plan view at bracket-type tie-down

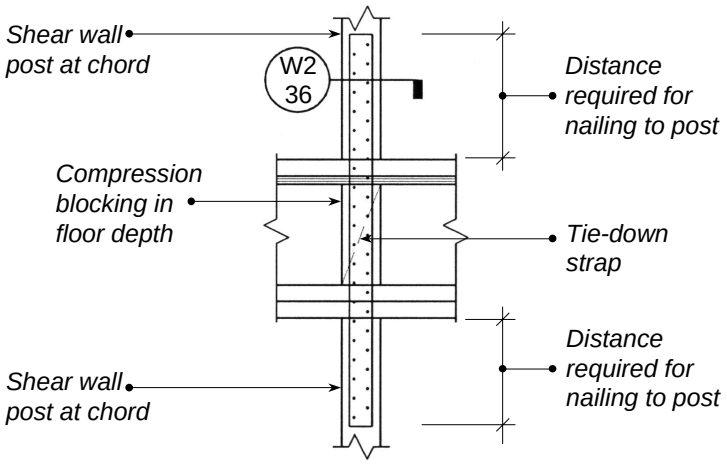

Figure W2-35 Through-floor nailed strap-type tie-down

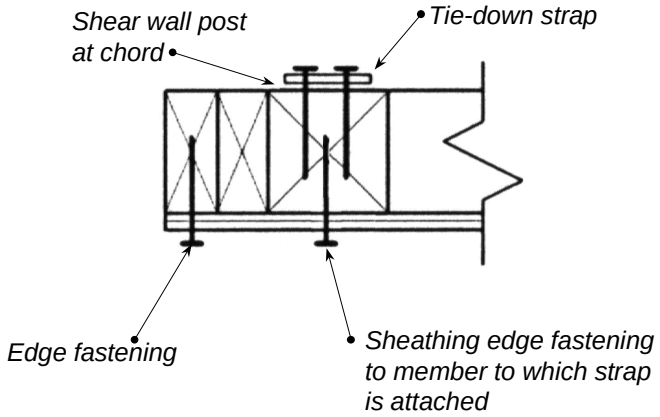

Figure W2-36 Plan view at strap-type tie-down

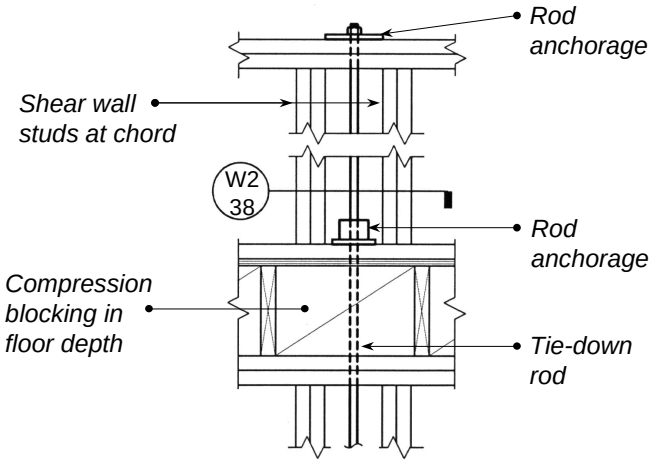

Figure W2-37 Multi-story continuous rod-type tie-down

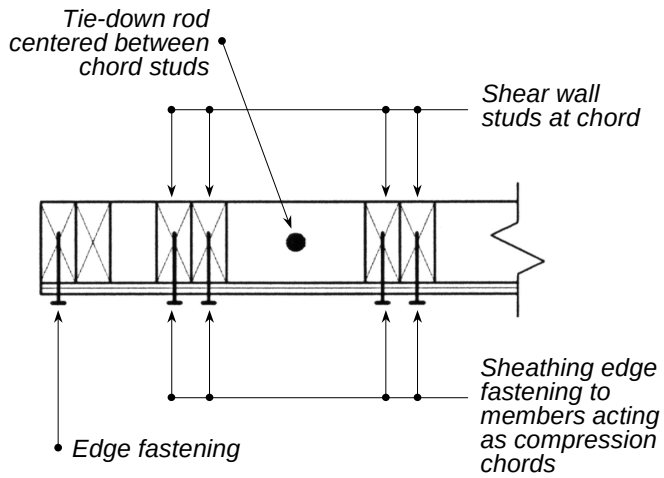

Figure W2-38 Plan view at continuous rod tie-down

Some discussion of tie-down brackets and their earthquake performance and testing has already been covered in the Shear Wall section. Many of the issues that apply to a shear-wall anchorage to the foundation are also applicable to ties from upper-floor shear walls to lower-floor shear walls. Most significant is movement in the tie-down bracket connection that is likely to result in premature failure of the shear-wall sheathing fastening and to cause excessive in-plane deflection.

B. Resolution of Issues Relating to Wall Above to Wall Below Connections

For Designers

Provide through-floor shear-transfer details to describe fully how to construct the necessary load path for the various conditions that may exist. Specific details for the installation of blocking in that load path, where I-joist or open web joist members are used, are particularly important.

Coordinate with the mechanical and plumbing designer or contractor to decide how to account for reductions in the through-floor transfer length where pipes and ducts in the floor or ceiling cavity cross shear-wall lines.

To account for lumber shrinkage effects where shear-wall sheathing is being spliced on a sawn lumber floor joist or rim blocking, the detail should show a horizontal gap and specifically locate the sheathing edge fastening near the top and bottom of the joist depth, rather than along the sheathing gap edges.

Special detailing is required for locations where floor-diaphragm boundaries are not continuous with shear walls below, and where upper shear wall and floor-diaphragm shear forces are subsequently transferred through adjacent roof diaphragms to reach an out-of-plane-offset shear wall below.

Always make it clear on tie-down details that shear-wall sheathing edge nailing is required into the shear-wall chord tie-down stud or post, regardless of where the actual vertical sheathing edge is located.

For Plan Check Engineers

Verify connection details are provided for the various framing orientations and conditions that exist at through-floor shear transfer locations.

Check the mechanical and plumbing drawings to identify locations where through-floor shear-transfer length will be reduced by crossing of ducts or piping. If the available length cannot provide the required capacity, have the designer provide supplemental connection capacity.

Identify where shear walls between stories are offset out-of-plane or where a floor diaphragm is not continuous with a shear wall below. Make sure that discontinuous floor-diaphragm shear forces are accounted for in the design of connections provided in the load path to the lower story wall.

Look for notes or a detail that clearly explains that shear-wall sheathing edge nailing must occur along the tie-down post location in the shear wall, regardless of the sheathing panel edge location.

For Inspectors

Locate all shear walls and examine the through-floor connection details for shear walls that stack vertically. Whenever a shear wall in an upper story does not have a shear wall occurring directly below, look for special notes regarding added blocking in the floor below or special fastening spacing of the floor-diaphragm sheathing near the location of the upper-story wall.

Where a shear wall only occurs in a lower story, look for a collector, in line with the wall, in the floor framing above.

If continuous blocking or framing at a through-floor shear-transfer location is interrupted by piping or ducts, it is prudent to make sure the plan-check engineer and the designer knew this would be missing. The reduced length of the transfer connection may not provide sufficient capacity.

If one edge of a floor diaphragm does not extend to a shear wall below, and connect directly to it, look for sections and details (similar to Figure W2-32) that provide a load path from that edge to an offset parallel shear wall below.

Verify the location of the framing stud or post to which a shear-wall tie-down is installed, and be sure that wall sheathing edge nailing is always provided into that stud or post, in addition to edge nailing into other framing located at the actual sheathing panel edge.

2.3.3 Sill Plate Anchor Bolts

Issues and Concerns. Anchor bolts complete the transfer of in-plane shear-wall forces to the foundation. The 1997 UBC requires steel plate washers on anchor bolts in Seismic Zones 3 and 4, and in Seismic Zone 4 increases the minimum size of anchor bolts, spaced at six feet, to 5/8-inch diameter.

A. Discussion

Figure W2-39 shows a typical detail for the fastening of the base of a shear wall to the foundation. Section 1806 in the 1997 UBC contains a new requirement for a 2x2x3/16-inch steel plate washer on anchor bolts in Seismic Zones 3 and 4. Also new is the requirement that 5/8-inch instead of ½-inch-diameter anchor bolts be provided, at not more than six feet on center, in Seismic Zone 4.

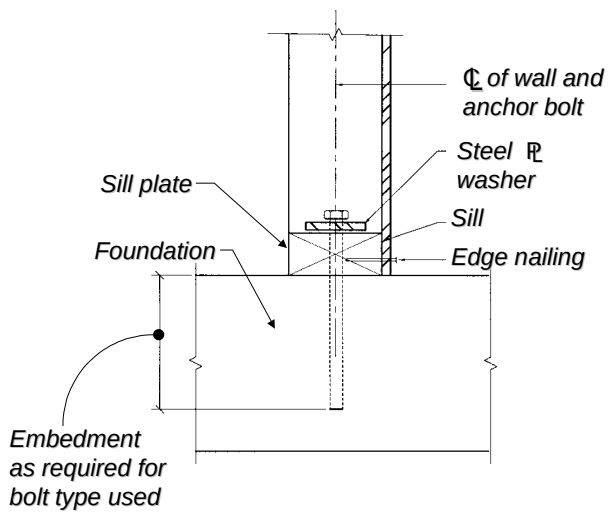

Figure W2-39 Typical foundation sill anchorage connection

The *NEHRP Recommended Provisions for New Buildings* (BSSC, 1997) have taken the use of steel plate washers a step further by recommending:

- Plate washers 3x3x1/4 inches for ½ and 5/8 inch diameter anchor bolts.
- Plate washers 3x3x3/8 inches for ¾, 7/8 and 1-inch diameter anchor bolts.

- A maximum dimension of 2 inches from the sheathed face of framing to the bolt centerline.
- Staggered bolts on walls, sheathed both sides, where required to maintain the 2 inch maximum dimension.

The Structural Engineers Association of Southern California also developed a preference for plate washers on anchor bolts. While testing foundation sill anchors for use in retrofits, they reported that sill anchor capacities noticeably increased when plate washers were used instead of standard round washers.

Some of the reasons for these recommendations are included in the following discussion on sill splitting.

Splitting of shear-wall sills was observed following the 1994 Northridge earthquake and has also been reported in shear wall laboratory testing by Dolan (1996) and in the ATC R-1 report (ATC,1995). Dolan reported sill splitting during shear-wall testing from two different sources. When the shear-wall tie-down bracket slips and deforms before it can take up load, often an adjacent sill anchor bolt will attempt to resist the uplift force. In addition, the sheathing nailing into the sill pulls up on the sheathed edge of the sill as the shear wall attempts to lift up due to overturning. The sill is restrained at the anchor bolt, resulting in a cross-grain bending failure of the sill. Similarly, at vertical plywood joints in longer shear walls, one sheathing sheet will be pushed down along this joint, while the other sheet is pulled up. The sheathing nailing to the sill again transmits these forces to the sill, and the sill will similarly fail in cross-grain bending. ATC-R-1 reported that sill splitting during the narrow wall testing was related to the slip of the sill. The use of plate washers instead of round cut washers has been shown to be effective in reducing splitting of sills.

The improper installation of anchor bolts is probably found more often than any other defect in existing construction. For an anchor bolt to function properly, it needs to be properly placed in the concrete, properly placed in the sill member, and have a tight hole in the sill. Improper location can result when the bolt is not properly supported during concrete placement, and the bolt is moved from its intended location. In some cases the bolts are placed by hand into the already cast and vibrated concrete. This placement method should not be permitted because it damages the concrete surrounding the bolt.

Another cause of improper location results when the bolt layout dimensions are incorrect at the time of the concrete pour. Wood sills are later placed at the correct location, but no longer fit on the sill bolts. It is fairly common in existing residential construction to find wood sills hanging off the edges of foundations or curbs, or to find anchor bolts that are at the edge of the sill. Wood sills that are not fully supported and anchor bolts that are centered less than one inch from the sill edge should be referred to the building designer for resolution.

Another construction error is oversized bolt holes in the wood sill. The National Design Standard (NDS) allows a bolt hole in wood to be up to 1/16 inch larger than the bolt diameter. It is very common, however, to find bolt hole diameters up to ½ inch oversized to permit easy installation of the sill. This results in the sill sliding a significant distance before it transfers load to the anchor bolt. This can result in splitting of the sill as the sill impacts the bolt. Proper hole sizes need to be provided even with the use of plate washers. Some designers have been retrofitting oversized sill holes by filling the space between the bolt and sill with epoxy. No testing has been done on this retrofit method, but it should eliminate sill movement relative to the bolt shank. One final group of construction problems involves sills notched for pipes. This was discussed in the Shear Wall Section 2.2.

Retrofitting of shear-wall anchorage often involves addition of anchor bolts using adhesive anchors or expansion anchors. Because of the radial splitting forces that can develop in concrete when using

expansion anchors, adhesive anchors are preferred for installation close to the edge of concrete. Anchor manufacturers provide information on recommended installation criteria and minimum edge distances.

B. Resolution of Issues Relating to Sill Plate Anchor Bolts

For Designers

In Seismic Zones 3 and 4 the 1997 UBC requires the use of minimum 2 x 2 x 3/16-inch plate washers on bolts connecting the sill plate to the foundation. Anchor bolt placement relative to the sheathed edge of wood sills, although not in the 1997 UBC, should be considered. Based on testing of sill anchorage with plate washers, a 2-inch maximum edge distance to the bolt centerline can reduce sill splitting during earthquake loading.

In Seismic Zone 4, the 1997 UBC requires a minimum 5/8-inch diameter sill anchor bolt for bolts spaced at 6 feet on center.

The selection of expansion bolts for sill anchorage should always consider the restrictive effects of limited concrete edge distance.

For Plan Check Engineers

Plans submitted under the 1997 UBC should specify minimum 2 x 2 x 3/16-inch plate washers on all sill anchor bolts for buildings located in either Seismic Zone 3 or 4, and in Seismic Zone 4 the minimum sill anchor bolt diameter for bolts spaced at 6 feet on center is now 5/8-inch.

Verify the product evaluation report for expansion anchors to determine the minimum required edge distance to prevent spalling of concrete at the bolt location.

For Inspectors

Verify that 5/8-inch diameter sill anchor bolts are used in Seismic Zone 4 when spaced at 6 feet on center. Also verify that minimum 2 x 2 x 3/16-inch square plate washers are used on all wood sill anchor bolts in Seismic Zones 3 and 4. To install this size washer properly the bolt centerline cannot be closer than one inch from the edge of the sill plate.

Verify that the hole in the sill plate for the anchor bolts is no greater than 1/16 inch larger than the bolt diameter as required by the National Design Standard referenced in the UBC. The use of plate washers is NOT intended to allow or compensate for larger holes in the sill plate.

Verify that the installed sill plate is the same wood species specified on the drawings (usually pressure-treated douglas fir that has a black color appearance). If Hem Fir (with a more green color appearance) is substituted, this softer wood will not provide either the bolt capacity nor the wall sheathing nailing capacity assumed by the designer and should be reported to the designer for resolution.

Sill anchor bolts for new construction should not be “wet set” because this damages the concrete around the bolt location. Sill anchor bolts, like other structural concrete embeds, should be securely located in forms prior to pouring. Because this is not a specific code requirement, and may not be specified on the drawings, the intentions of the designer regarding acceptable anchor-bolt placement techniques should be determined prior to the inspection.

Verify that the distance from the center of an expansion anchor bolt to the nearest edge of concrete is at least the minimum allowed by the evaluation report for the specific product being installed. Be aware that these reports often require both an absolute minimum distance, and a larger minimum distance to obtain the full bolt capacity. When in doubt as to which minimum distance should be applied to a specific installation, verify the requirement with the designer.

2.3.4. Tie-down Anchorage

Issues and Concerns. Tie-down anchorage from shear walls to the foundation is often improperly installed and sometimes inadequately designed. Proper consideration

of foundation construction sequence, tie-down embedded-anchor type and length, and foundation material capacity is necessary to ensure the proper earthquake performance of this very important link in the load path. Further information on deformation of tie-down devices and proper determination of the tie-down anchorage force is provided in the Shear Walls Section 2.2

A. Discussion and Examples

Splicing of shear-wall chords is discussed in the prior section on through-floor connections. Figures W2-33, W2-35, and W2-37 show systems that are typically used for through-floor tension chord anchorage, and Figures W2-34, W2-36, and W2-38 show their respective plan view details. The systems for shear-wall chord anchorage to the foundation are almost identical. Figure W2-40 uses a tie-down bracket and a steel bolt embedded into the foundation concrete. Figure W2-41 uses a strap, nailed to the shear-wall framing and embedded into the foundation concrete, and Figure W2-42 shows a full-height threaded rod or cable anchored at the top of the wall and embedded into the foundation concrete.

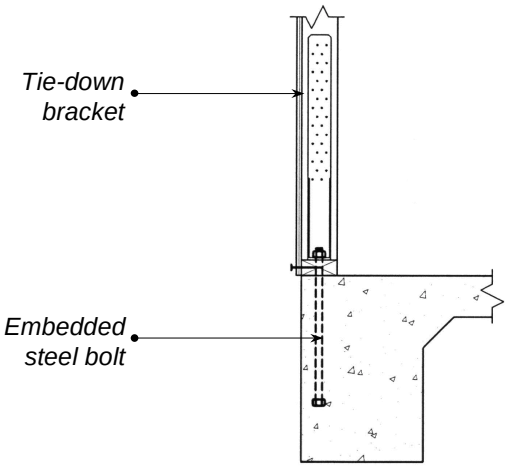

Figure W2-40 Tie-down with embedded bolt

Design of the anchorage of tie-downs to the foundation concrete requires four steps. The first step is to determine the correct tension anchorage force, which is a topic discussed in Shear Walls Section 2.2. The second is to select tie-down hardware adequate to carry the tension force. The third is to verify that the bolt or strap anchorage or embedment in foundation concrete is adequate to resist a concrete shear cone or spalling failure. The fourth step is to design the foundation for the shear forces and moments that result from the anchorage forces. The manufacturer of the bracket, strap or rod generally designs the second step and may provide guidance on step three.

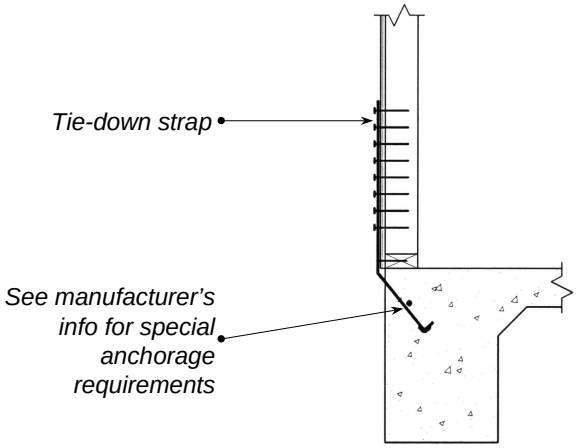

Figure W2-41 Tie-down with embedded strap

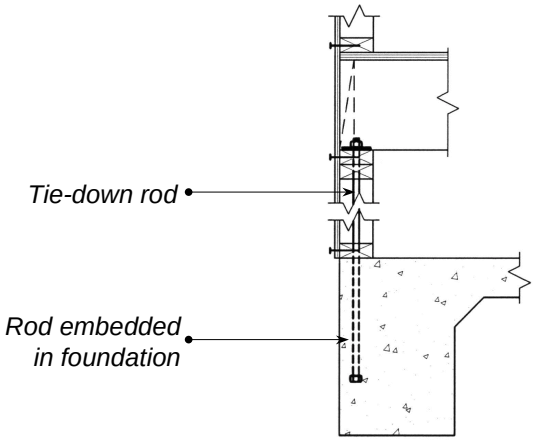

Figure W2-42 Tie-down with embedded continuous rod

The third and fourth steps are still the responsibility of the building designer and must address several variables. The configuration of a footing or foundation stem wall into which tie-down straps or bolts are being embedded can vary greatly. Even when the required embedment is

specified by the manufacturer, the manufacturer might have envisioned embedment into a footing cast monolithically with a slab on grade, when the actual building configuration may involve embedment into a separately cast slab, a curb, or a stem wall. The stem wall may even be masonry instead of concrete, with placement constrained by the masonry layout. The building designer should specifically detail all unique anchorage conditions and should calculate the anchorage capacity.

A general discussion of tie-down brackets and their earthquake performance and testing is covered in the Shear Wall Section 2.2. There are some specific concerns however, for the tie-down strap shown in Figure W2-41. First of all, the typical installation of this anchor is intended to be at a location where the slab on grade extends beyond the anchor. Manufacturers provide special installation instructions or special products for installation at concrete edges or corners. Secondly, there are significant construction tolerance problems with some straps. Often the strap, as it was installed, does not line up properly with the face of the wood framing and will be field-bent to connect it to the face of framing. This results in the strap straightening out and moving as it takes its load, resulting in increased damage to the shear wall. Sometimes this problem can be corrected by shimming the face of framing to the plane of the strap. This type of detail should be specifically designed for a particular application, keeping in mind concerns regarding splitting of framing with close fastener spacing. Sharp bends in the straps and misalignment of more than approximately 1/8 inch should not be permitted.

In retrofit work, tie-down anchors are most often fastened to the foundation with adhesive anchors. There are many adhesive anchor manufacturers using varying formulations of adhesive. It is important to verify that a particular product has been approved to resist earthquake loading, and that it is recommended by the manufacturer for the particular materials used in the existing foundation. Some anchors are intended for use in concrete but not masonry. Other anchors are intended for use only in specific types of masonry.

It is very important that the drilled holes are thoroughly cleaned before the adhesive is placed. Improper cleaning can result in the anchor capacity being only a fraction of the intended capacity. Proper cleaning generally involves using compressed air, as well as a brush to removed caked concrete dust on the sides of the hole. Manufacturers provide detailed instructions for installation and are sometimes available at the job site at the start of work to demonstrate proper installation procedure. A portion of the anchors should be pull-tested, particularly when existing concrete or masonry capacity is a concern.

B. Resolution of Issues Relating to Tie-down Anchorage

For Designers

Determining the tie-down anchorage capacity in foundations requires consideration of the foundation material, its configuration, and its construction sequence (e.g., concrete monolithic pour, or separate pours for the footing and for the slab or curb or stemwall). If the design is based on a monolithic pour, specify on the plans any limitations that may apply if a contractor chooses to use separate pours.

The depth of embedment for tie-down anchor bolts and the configuration of the embedded end (e.g., double nut, plate washer, hooked end) must be specified on drawings with appropriate calculations provided to justify the embedment length.

Drawings should specify minimum concrete edge distances whenever tie-downs with embedded straps are used, particularly at corner locations, and should specify limits on misalignment between the strap extension above the foundation and the face of the framing to which it must attach.

The selection of a tie-down anchor-rod adhesive product must consider its acceptance for resisting earthquake loads.

Field tension testing of some number of the installed anchors should also be considered.

Other considerations regarding determination of the required tension capacity and the deflection potential for certain types of tie-down products are discussed in the Shear Wall Section 2.2

For Plan Check Engineers

Drawings should specify how the designer envisions the foundation to be constructed. Usually only a monolithic pour is shown, but the actual construction sequencing may be different. If the footing is cast separately from a slab, curb or stemwall this will likely reduce the effective embedment length and capacity of the tie-down anchor.

Drawings should specify the intended depth of embedment and show the specific configuration of the embedded end (e.g., double nut, plate washer, hooked end) of tie-down bolts. A design for the capacity of the bolt in the foundation material should also be submitted for that configuration.

Verify the manufacturer's minimum concrete edge distance criteria for strap-type tie-downs can be provided at the locations where the tie-downs are specified.

Where anchors are not cast in place, verify the installation criteria (e.g., special inspection or tests) and allowable tension value based on the specific product's evaluation report. The anchor should be specifically listed as acceptable for resisting earthquake loading.

For Inspectors

All tie-downs to be cast in the foundation must be securely installed in the forms prior to the pour. If the drawings show only a single pour configuration and the contractor is instead casting footings separately from slabs, curbs or stem walls, this condition must be evaluated and accepted by the designer prior to the placing of concrete, because the reduced available embedded length of an anchor within the second pour may not provide the capacity intended by the designer.

Verify that the embedded end of bolts or rods matches the drawings with respect to hooks, plate washers or nuts. The end condition can affect the bolt capacity in the foundation.

Verify the manufacturer's minimum concrete edge distance criteria for strap-type tie-downs is provided at all sides. Do not allow strap anchors to be field bent at locations other than those permitted by the product manufacturer.

Verify if special inspection or testing is required for tie-down anchor rods that are not cast in place. Adhesive-set anchors require very clean holes and care in mixing and placing the adhesive. Substitution of a different adhesive anchor product or the substitution of an expansion anchor should not be permitted without approval from the designer.

2.3.5 Design Requirements for Discontinuous Shear Walls

Issues and Concerns. The UBC has specified special force requirements for the design of columns supporting discontinuous shear walls since its 1988 edition. In the 1997 UBC this requirement is specifically applicable to wood construction, and has been expanded to include all members supporting discontinuous shear walls, not just columns.

Wood construction often includes cantilevers and set-backs of exterior walls and, particularly in residential construction, walls at upper stories that are not directly above walls at lower stories. When a shear wall at an upper story does not have shear walls directly below in all of the lower stories, it is called a discontinuous shear wall. Prior to the 1997 UBC, a discontinuous shear wall in wood construction was not viewed as a particular concern. Starting with the 1997 UBC, special design forces must be considered to ensure that members supporting the discontinuous shear wall are not weak links in the system.

The special design forces have their roots in the fact that the earthquake forces used for building design are on the order of one quarter of the force that may actually occur. In general it is expected that the lateral-force-resisting seismic elements will be subjected to higher forces than code design forces, but will be able to withstand those higher forces because of their ability to deform stably and dissipate energy. When shear walls do not continue to the foundation, it is important to determine that beams or posts supporting the shear wall will not fail before the shear wall has reached failure. To address this concern, the 1997 UBC requires design of supporting members using a magnified seismic force. Because the magnified force is at a strength design level and UBC wood design values are based on allowable stress design (ASD), a method of converting to strength capacities is provided. This requirement is likely to restrict significantly the use of discontinuous shear walls. When used, discontinuous shear walls are likely to have much stiffer supports than they have in the past. The provision does not specifically state how far along the load path to the foundation these forces need to be carried, so that engineering judgment must be used.

An exception specifically exempts concrete slabs supporting light-frame wood shear-wall systems from the magnified force because of a lack of observed damage to concrete slabs having wood-framed shear walls above.

2.3.6 References and Resources

AFPA, 1997, *National Design Specifications for Wood Construction* (NDS), American Forest and Paper Association, Washington, D.C.

ATC, 1995, *Cyclic Testing of Narrow Plywood Shear Walls*, ATC R-1 Report, Applied Technology Council, Redwood City, California.

BSSC, 1997, *NEHRP Recommended Provisions for Seismic Regulations for New Buildings and Other Structures*, and *Commentary*, prepared by the Building Seismic Safety Council, published by the Federal Emergency Management Agency, FEMA Reports 302 and 303, Washington D.C.

Commins, A. and Gregg, R., 1996, *Effect of Hold-Downs and Stud-Frame Systems on the Cyclic Behavior of Wood Shear Walls*, Simpson Strong-Tie Company, Pleasanton, California.

Dolan, J.D., 1996, *Experimental Results from Cyclic Racking Tests of Wood Shear Walls with Openings*, Timber Engineering Report No. TE-1996-001, Virginia Polytechnic Institute and State University, Blacksburg, Virginia.

Dolan, J.D. and Heine, C.P., 1997, *Monotonic Tests of Wood-frame Shear Walls with Various Openings and Base Restraint Configurations*, Timber Engineering Report No. TE-1997-001, Virginia Polytechnic Institute and State University, Blacksburg, Virginia.

Dolan, J.D. and Heine, C.P., 1997, *Sequential Phased Displacement Cyclic Tests of Wood-Frame Shear Walls with Various Openings and Base Restrain Configurations*, Timber Engineering Report No. TE-1997-002, Virginia Polytechnic Institute and State University, Blacksburg, Virginia.

Dolan, J.D. and Heine, C.P., 1997, *Sequential Phased Displacement Tests of Wood-frame Shear Walls with Corners*, Timber Engineering Report No. TE-1997-003, Virginia Polytechnic Institute and State University, Blacksburg, Virginia.

ICBO, various editions, *Uniform Building Code*, International Conference of Building Officials, Whittier, California.

SEAOC, 1997, *Seismic Detailing Examples for Engineered Light-Frame Timber Construction*, Structural Engineers Association of California, Sacramento, California.

SEAOC, 1997, *Guidelines for Diaphragms and Shear Walls*, Structural Engineers Association of California, Sacramento, California.

SEAOSC, 1993 and 1995, *Test Report and Analysis, Residential Retrofit Testing Program,* Existing Buildings Committee, Structural Methods Subcommittee, Structural Engineers Association of Southern California, Whittier, California.

Woodward Clyde, 1998, *Participant Handbook, Seismic Retrofit Training For Building Contractors & Inspectors,* Woodward Clyde Federal Services and Hazard Mitigation Technical Assistance Partnership, Inc., Pasadena, California.

2.5 Irregular Configurations

The objective of this section is to provide designers, plan check engineers and inspectors with examples of how irregular building shape or geometry can increase the amount of damage that occurs during earthquakes. This section introduces the concept of regular and irregular buildings and the UBC definitions of irregularities, and goes on to describe irregularities common to wood-frame buildings and the effects these can have on the seismic performance.

2.5.1 Regular versus Irregular Building Configurations

Issues and Concerns. In recent earthquakes, buildings with irregular configurations have been observed to sustain much greater damage than buildings with simple regular configurations. This observed behavior has led to code restrictions on the design of irregular buildings.

A. Discussion and Examples

A regular wood-frame building having the optimum configuration for seismic resistance would exhibit the following attributes;

- A rectangular plan with identical plan dimensions at each level
- Shear walls distributed uniformly along each major axis
- Shear-wall strength at each story level in proportion to seismic design forces at that story
- A level foundation or base elevation
- Equal story heights
- Constant story-to-story weight
- Equal stiffness of shear walls in each story level along each axis
- Shear walls stacked directly on top of each other from the foundation to the top story in which they are required.

These attributes describe an ideal regular building that is rarely if ever constructed, because buildings also must meet occupant needs, building site constraints and aesthetic considerations.

The UBC defines ten building irregularities, five of which relate to the vertical layout of a building and five which are related to the plan layout. For most of these the UBC sets a threshold of variation from the ideal regular building, allowing for some minor irregularity to occur. If a building falls beyond those limits it will be defined as irregular. Of the ten irregularities defined in the UBC, only a few occur frequently in wood-frame buildings. The balance of this section discusses six types of irregularity that occur frequently in wood-frame buildings. The SEAOC Blue Book (SEAOC, 1996) and *the NEHRP Guidelines for the Seismic Rehabilitation of Buildings* (ATC, 1997) are additional sources for information on building irregularities.

2.5.2 Buildings with Soft Stories or Weak Stories

Issues and Concerns. Door and window openings in the lowest story walls often result in the shear-wall system at that level having significantly less strength, or being significantly more flexible, than the shear-wall systems in the stories above. The effect of this type of irregularity was dramatically demonstrated during the 1989 Loma Prieta earthquake where residential buildings with numerous garage door openings at the lowest level had nearly complete failure of ground floor walls See Figure W2-46. Stories with reduced strength and stiffness can also occur above the ground floor.

Strength and Stiffness Variations Between Stories

When the available length of shear walls in any story is limited, it may result in a building with either a “soft” or a “weak “ story, or possibly both. A soft story is the result of a stiffness deficiency and is defined in the UBC as occurring when the lateral stiffness of a story is less than 70 percent of the story above, or less than 80 percent of the average of the three stories above. These two percentage criteria are applied to

Figure W2-46 Building with weak and soft story, damaged in the Loma Prieta earthquake.

all lateral-force-resisting elements in one direction in a story, not to just a single wall line where openings may be concentrated. While it is common for a single wall line to be reduced more than 70 percent in stiffness, it is less common for an entire story stiffness to be reduced this much.

The effects of a soft story include the concentration of building drift in that story. In addition, a soft story can modify the dynamic characteristics of the building resulting in a different vertical distribution of seismic forces than may have been assumed in its design. The UBC requires that a dynamic design method must be used for a soft story; however, this is generally not applicable to wood-frame buildings because of exceptions allowing simpler analysis methods for light-frame buildings not more than three stories in height.

A weak story is the result of a strength deficiency. The UBC defines a weak story as occurring when the lateral strength of a story is less than 80 percent of the story above. This criterion again applies to all lateral-force resisting elements in one direction of a story, not to just a single wall line. Similar to a soft story, the effect of a weak story is concentration of response to seismic forces in a single story instead of the normally assumed distribution of forces over the height of the building. The UBC penalizes a weak story by either limiting the building to a maximum of two stories or 30 feet in height, or by requiring design for the amplified seismic force level, which for wood shear wall buildings is 2.8 times the normal 1997 UBC earthquake forces.

From a structural standpoint, the most desirable approach to retrofitting a soft or weak story in a wood shear wall building is the addition of enough wood shear wall to eliminate the irregularity. This approach is likely to be a lower cost solution, however. Replacing certain openings with solid walls is also likely to have an impact on the functionality of the building. A steel bracing system, whether braced or moment frame, can sometimes provide the necessary strength and stiffness without interfering with the functionality of the building. However, the use of a steel moment frame must consider the important issue of its deformation compatibility with existing or retrofitted shear walls, as well as adequacy of steel beam-to-column moment connections.

2.5.3 Open Front Buildings

Issues and Concerns. The preceding section discussed soft story and weak story buildings where the lateral force resistance of an entire story is made softer or weaker by the building configuration. In many buildings openings are concentrated into a single exterior wall line, resulting in the entire front (or side, or back) of the building

being weak or soft from the standpoint its of lateral force resistance. Under seismic loading the open side deflects and seismic forces must be redistributed to shear walls in other portions of the buildings. A very common occurrence of this configuration is in multi-family residential buildings with "tuck-under" parking at the ground floor. This open front configuration is thought to have been a significant contributor to the failure of the Northridge Meadows apartment buildings in the Northridge earthquake (see Figure W2-47). A detailed discussion of retrofitting buildings with this type of configuration is contained in Section 3.1, Retrofit of Multi-Family Residential Buildings with Soft First Story.

Torsional Eccentricity and Diaphragm Rotation

The response of an open front building is a result of the lack of stiffness along the open front of the building compared to the back. The greater deflection occurring at the open front results in rotation of the building diaphragm under seismic loading and redistribution of the seismic forces through the floor diaphragm to other lines of resistance. The UBC term for this behavior is torsional eccentricity. The UBC threshold defining when torsional eccentricity exists is when the maximum story drift along the wall line is more than 1.2 times the average story drift. The UBC penalizes this type of irregularity by prohibiting the use of the normally permitted one-third increase in design allowable stresses for earthquake loading and the duration of load increase applicable to wood members and connections, for collector members and their connections to shear walls below. It is also likely that an open-front building will have a weak or soft story as discussed above, and it may also have discontinuous shear walls, as discussed in the following subsection.

More important than the code's minimum design forces, or limitations on allowable stress increases for this type of irregularity, is the use of appropriate design assumptions and force distributions for this building configuration. Unless the proper assumptions are made, buildings that appear to meet the requirements of the current building code could still potentially pose significant seismic hazards. Section 3.1 discusses design assumptions including deformation compatibility with steel columns and with different shear wall stiffnesses.

In the Northridge Earthquake the largest concentration of lost lives occurred in open front buildings in the Northridge Meadows apartment complex. Similar existing construction is spread throughout California.

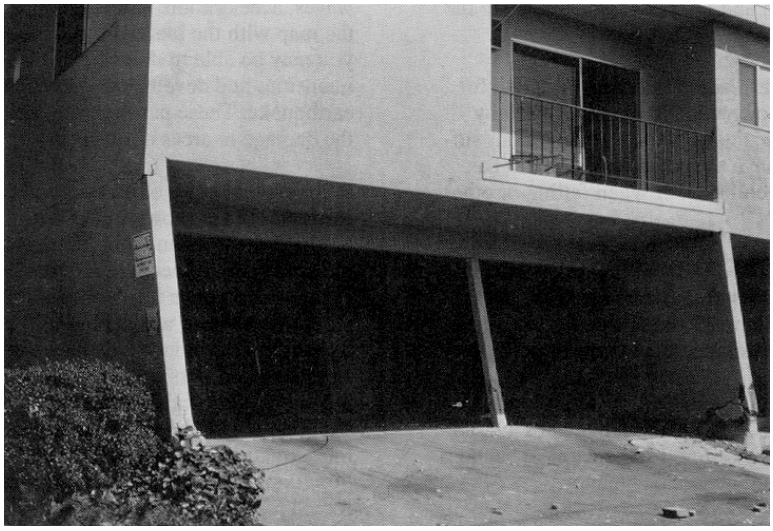

Figure W2-47 Open front apartment with severe damage.

Seismic retrofit of buildings with this irregularity should be strongly encouraged.

2.5.4 Discontinuous Shear Walls

Issues and Concerns. Upper story shear walls that do not continue to lower stories are very common in wood frame buildings. Three different conditions commonly create this type of irregularity. The first is a condition with shear walls in the story above (over a row of beams and columns below) as discussed in the previous two subsections. The second condition is upper level shear walls that are cantilevered beyond or set back from shear walls in the story below. The third condition is upper story walls where there is simply no wall located below. The primary concern in each of these conditions is the concentration of forces in beam and column elements supporting the upper story shear wall. These members must be capable of resisting the vertical downward and uplift forces at the ends of the discontinued shear wall. In addition, the diaphragm below the wall must be capable of distributing the horizontal forces from the wall above, to other shear walls at other locations in the story below. Figure W2-48 shows a typical discontinuous shear wall configuration.

Out-of-Plane Offsets and In-plane Discontinuity

The UBC uses the terms out-of-plane offset and in-plane discontinuity to identify irregularity due to discontinuous shear walls. There is no minimum threshold applicable to the out-of-plane irregularity. It applies regardless of the magnitude of the offset between walls above the floor and walls below. For in-plane offsets the limit is equal to the length of resisting element.

The effects of shear wall discontinuity between stories involves two types of stress concentrations; those that occur in floor members directly below the wall, caused by the vertical overturning forces at the base of the shear walls, and shear transfer stress concentrations in the diaphragm between the base of the shear wall above and the top of other shear walls below.

The UBC penalizes this irregularity by requiring the design to apply the amplified

2.6 Design Issues in Buildings with Concrete or Masonry Walls

The objective of this section is to explain the forces acting on out-of-plane wall connections between wood diaphragms and concrete or masonry walls, and how they should be properly detailed to provide adequate anchorage. See Section 3.2 for a discussion of wall anchorage retrofitting. Because this section focuses on design issues, it is primarily intended for designers and plan check engineers.

Issues and Concerns. Anchorage connections between wood-framed diaphragms and concrete and masonry walls that fail in earthquakes can result in a partial collapse of building walls, roof and floors. Based on damage observed primarily at the roof level of tilt-up concrete buildings during the 1971 San Fernando earthquake, the 1973 edition of the *Uniform Building Code* added provisions that prohibited the use of connections that would induce cross-grain bending, or cross-grain tension in wood members. This type of failure commonly occurred where wood ledgers bolted to walls had been used to provide the out-of-plane anchorage connection. The 1973 code change adequately addressed this particular failure mechanism; however, it did not consider how other parts of the anchorage system should be designed to perform well in earthquakes. The 1994 Northridge earthquake exposed additional flaws in the anchorage methods that were in common use after the changes in the 1973 UBC. Several new requirements have been placed in the 1997 UBC to address these problems.

A. Discussion and Examples

Low-rise concrete and masonry-wall buildings commonly utilize a wood framed roof diaphragm, and some may also have a wood framed and sheathed floor diaphragm. These diaphragms provide anchorage to resist out-of-plane forces on the concrete and masonry walls. The out-of-plane earthquake forces are a result of the diaphragm pushing or pulling on the walls in response to building drift and the bending of the diaphragm itself under lateral loads. Adequate resistance for out-of-plane forces is of critical importance when the walls are concrete or masonry, because of the large anchorage demand forces these massive walls create. As shown in Figure W2-52, a connection failure can result in a collapse of the roof or floor, and the wall itself may also fall.

Figure W2-52 Diaphragm connection failure

Proper design of out-of-plane wall anchorage requires that it be considered a system consisting of a collection of structural elements. The 1997 UBC provides for the first time a definition of a "wall anchorage system" that includes not only the connection parts at the wall, but also portions of the diaphragm away from the wall that require extra capacity to distribute the anchorage force into the diaphragm. Another important concept for proper anchorage is that each of the anchorage elements must have approximately the same capacity to resist the imposed forces. Because wall anchorage systems typically involve three distinctly different materials—concrete (or masonry) wall; steel rods, bolts and connection hardware; and wood framing members and wood structural panel sheathing—the differences in capacity and in the failure modes of each material must be clearly understood and carefully considered in the overall anchorage design.

Potential failure modes for wall anchorage include:

- Shear cone failure in the concrete or masonry allowing the anchor to pull out of the wall.
- Fracture of light-gage steel hardware at bends, joints and bolt holes

- Splitting of wood framing members at bolted or at nailed connections
- Splitting of diaphragm sheathing or nail pull-out along the line of anchorage

To address these issues the 1997 UBC has added several specific new requirements:

- Anchorage using straps embedded in the wall must have the end of the strap attached to, or hooked around, reinforcing steel in the wall, or be otherwise terminated to effectively transfer forces to the reinforcing steel.
- The minimum anchorage force for strength design of steel elements used in the anchorage system must be 1.4 times the forces used as the anchorage system demand force.
- Wood elements of the anchorage system must have a minimum net thickness of 2-1/2 inches (3x nominal).
- Anchorage components must be loaded concentrically or must be specifically designed for the additional forces resulting from an eccentricity.
- The anchorage force at pilasters in the wall must account for the additional load transferred from the wall panels to the pilaster.
- The maximum length-to-width ratio of sub-diaphragms in wood diaphragms supporting concrete or masonry walls must not exceed 2-1/2:1

There is one more requirement that must be mentioned here, although it is not new in the 1997 UBC. In fact this requirement has been in the code since 1976, but has not always been enforced or provided for in designs. The requirement is for continuous ties or struts between diaphragm chords to distribute anchorage forces from concrete or masonry walls into the diaphragm. The new definition in the 1997 UBC for wall anchorage system specifically includes continuous ties, making it very clear that these ties are to be designed for those anchorage loads. In addition, the new maximum length to width limit of 2-1/2:1 for sub-diaphragms will likely result in these cross ties occurring more frequently and at closer spacing than was previously required.

Cross Ties and Sub-diaphragms

Wall anchors produce additional stresses within the diaphragm because the out-of-plane anchorage force must be resisted by the nailing of diaphragm sheathing along the line of the anchored beams. The code requires continuous cross ties between walls on opposite sides of the building to distribute anchorage loads into the diaphragm. Where beams are not a single continuous piece across the entire diaphragm, the individual beams must be spliced to provide this continuous tie. These connections may use steel plates with bolts through the beams and may also require welded connections where beams intersect interior steel columns or where open web steel truss joists are used as the framing members.

The lack of continuous ties across the full width of the diaphragm allows tearing of the sheathing and diaphragm fracture at framing member joints. Diaphragms require continuous orthogonal cross ties to resist the tensile forces caused by shearing stresses in the diaphragm. Providing full span cross ties spaced at the main girder spacing creates a grid to hold the diaphragm together. The distribution of wall anchorage forces into the diaphragm, depends on the length of the sub-diaphragm and the corresponding spacing of continuity ties defining its width. Where large spacing occurs between ties, the main diaphragm may not have the necessary capacity to resist the wall anchorage forces, and providing additional fasteners may be necessary along the continuous tie.

The concept of sub-diaphragms is actually quite straightforward and can be directly related to the forces and actions of the main diaphragm under lateral loading. The main diaphragm is provided with collector members that transmit lateral forces parallel to its boundary edges to resisting elements. The main diaphragm chords are used to resist bending forces induced by lateral forces acting along an edge perpendicular to the direction of the lateral forces.

Wall anchorage loads are simply a subset of the main diaphragm forces that cause the

same types of stresses in a smaller segment of the main diaphragm that we call a sub-diaphragm. Wall anchorage forces are transferred into the main diaphragm along continuous ties, formed by beams or purlin framing lines parallel to the anchorage force. These forces are analogous to those in a boundary collector along the main diaphragm edges.

The sub-diaphragm width is defined by the spacing of those ties and its length is defined by the distance to a sub-diaphragm chord member resisting the bending in that segment of the diaphragm. A sub-diaphragm chord, therefore, is a framing member perpendicular to the cross ties. The forces in sub-diaphragm chords are tension and compression forces resulting from bending, and the forces in the cross ties are axial tension and compression. The same splicing of chords and collectors to provide continuity for the load path of these sub-diaphragm forces is required, as it is for the main diaphragm. See Section 2.1, Diaphragms, for a more detailed discussion of chords and collectors.

Connector Stiffness and Symmetry

Failure for connectors used in wall anchorage systems can include excessive stretching or deformation of the body of the connector, and other parts such as straps or even threaded rods that form a part of the connection. When a connector located at the wall-to-diaphragm interface elongates, it allows the wall to pull away from the roof or floor framing. When this occurs wood ledgers may still fail in cross grain bending or tension, and framing members in joist hangers may lose their vertical support. Poor installation of connectors, including oversized bolt holes in the wood members, unintended bends or kinks in metal straps and mis-aligned anchors into the wall will also allow movement that can create this type of failure.

Proper design and installation of connectors depends on understanding the importance of both the strength and stiffness properties of connectors. Published allowable capacities for connectors establish maximum allowable strength values without always reporting the accompanying stiffness properties. Connectors in wall anchorage systems should not deform more than 1/8 inch under allowable seismic loads. The allowable tension capacity at this amount of deformation may be as little as one-third of the manufacturer's published value, because stiffness frequently governs the allowable load on the connector. Stiffness is primarily a result of material strength, its thickness or gage, and the configuration of reinforcing side plates. Substitution of connector types, or modified connectors used during construction can quickly defeat any careful stiffness analysis by the designer.

Configuring connectors symmetrically eliminates flexural stresses and deformation of the wood from connectors bearing on wood. Connectors attached to the vertical sides of framing members should be installed in pairs. The 1997 UBC explicitly requires a symmetrical anchorage configuration unless an analysis of the eccentric forces for a single-sided connection is provided, when paired connections cannot be used. Resolving the eccentricity may require other members to be added to the connection, designed to resist the forces generated by the eccentricity, which act perpendicularly to the initial anchorage forces.

Special Considerations at Pilasters

The anchorage force at pilasters is usually larger compared to other anchorage locations because of the greater pilaster stiffness compared to the wall. The adjacent wall is basically loading the pilaster in two-way-slab action fashion. This larger force is applied directly to the girder or truss member at the top of the pilaster. As shown in the Northridge earthquake, most existing connections of pilasters to girders are inadequate to resist this concentration of forces. For this reason the 1997 UBC specifies that anchorage at pilasters must consider these effects. A significant part of the damage problem also lies in the insufficient edge distance of the typical anchor bolts used for the girder connection into the top of the pilaster. This has been seen to occur even with the code required confinement from ties located at the very top

of columns. Because vertical construction joints often occur at pilaster edges, the edge distance from the embedded anchor to the joint can reduce the capacity and change the performance of anchorage connections located at pilasters.

B. Resolution of Design Issues in Buildings with Concrete and Masonry Walls

For Designers and Plan Check Engineers

The 1997 UBC Section 1633.2.8.1 contains numerous new provisions to improve the performance of wall anchorage between flexible diaphragms and concrete or masonry walls. The performance of these connections is essential to the safety of building occupants because anchorage failure can result in roof or floor collapse. Attention to connector symmetry and the potential for elongation or deformation of the connector are necessary to achieve proper performance.

For Inspectors

As a result of the changes in the 1997 UBC, expect to see larger bolts and perhaps closer spacing of wall anchorage connections in concrete and masonry wall buildings. Connections should be perpendicular to the wall and should always be symmetrical (e.g., installed in pairs on both sides of a beam) unless a specific design was submitted to justify an eccentric connection geometry. Substitutions of anchors other than those specified on the drawings or field adjusted non-symmetrical connections should be questioned and referred to the designer for review and resolution.

2.6.7 References

Hamburger, R.O., 1995, "Lessons learned in the Northridge earthquake on wood frame buildings," *Northridge Earthquake: Lessons Learned*, 1994 Spring Seminar, Structural Engineers Association of Northern California, San Francisco, California,.

ICBO, 1973, 1976 and 1997 editions, *Uniform Building Code*, International Conference of Building Officials, Whittier, California

EERI, 1996, *Earthquake Spectra*, Supplement C to Volume 11, Northridge Earthquake Reconnaissance Report, Vol. 2, Chapter 6: Wood Buildings, Earthquake Engineering Research Institute, Oakland, California.

SEAOC, 1997, *Guidelines for Diaphragms and Shear Walls*, Structural Engineers Association of California, Sacramento, California.

Lesson W3:
Seismic Retrofitting of Wood-Frame Construction—Special Considerations

3.1 Retrofitting Multi-Family Residential Buildings with Soft First Story

3.1.1 Lessons from the Northridge Earthquake

During the 1994 Northridge earthquake, sixteen persons lost their lives when the Northridge Meadows apartment complex collapsed. Several hundred other apartment buildings completely or partially collapsed causing extensive property damage and personal injury. Because the construction of these damaged buildings is similar to many other multi-family structures found throughout California, engineers carefully studied the causes of these failures. They concluded that several factors contributed to the poor performance of these buildings during a moderate earthquake. These factors include

- lack of adequate shear-wall strength and connections in the load path;
- excessive deflection of lateral-force resisting elements and secondary columns;
- absence of lateral-force resisting elements at large ground floor openings; and
- errors and omissions in construction and design.

3.1.2 Identifying Existing Structural Weaknesses

One of the most easily identified structural irregularities is the presence of the so-called "soft story" at parking bays. Because the large openings suggest that something is wrong, the commonly applied solution is to design a stiff frame to "correct" the problem. However, most of these vulnerable structures have additional structural weaknesses at their lower levels. These can include:

- weak stories;
- deformation incompatibility;
- inadequate ties between building segments;
- large cantilevered building sections; and
- stiffness variations between resisting lines in a story.

An experienced engineer will consider the relative contribution from each of the above sources and determine how best to mitigate their combined effects.

3.1.3 Weak Stories

Buildings with frames at parking bays that meet modern drift requirements can still collapse due to weakness in transverse shear walls. Ground level parking inside residential buildings often creates a weak story as well as a soft story. Large differences in strength capacities between stories can concentrate excessive inelastic deformation at the weaker level and cause collapse. Designers must consider the effect of weak stories when the strength of the ground level is less that 80 percent of the story above. Weak stories are also present when existing shear walls use cement or gypsum plaster, gypsum board, horizontal wood siding, or sheathing to resist lateral loads. These materials do not have sufficient strength to resist earthquake loads of any significant magnitude.

3.1.4 Deformation Compatibility Problems

Failure of columns along an open side of a building can cause a partial or full structural collapse. Many buildings with parking on the lowest story use steel columns along the open side. Although steel columns embedded in concrete are typically designed for vertical loads, assuming both ends are free to rotate, these columns behave as fixed at their base for lateral loading. This inability to rotate allows the combination of bending and axial forces to create plastic hinges that contribute to failure. Analysis of columns with fixed base supports often reveals problems with P-delta effects that were ignored in the original design.

3.1.5 Building Segments with Different Periods of Vibration

Another significant problem exists when portions of the building have different heights, masses, or both. Without each section properly tied together, each portion will separate to move independently based on its own period of vibration. This is most common when a building has different story heights or reentrant corners. Older buildings were not constructed with the ties between building segments required for modern buildings. Creating collectors and tie connections (usually at diaphragms) is critical to keeping the individual building segments from breaking apart. Separation can also occur at appendages, such as roof structures over exits and exterior stairs. These two elements are critical for providing a safe post-earthquake means of egress from a building.

3.1.6 Diaphragm Rotation and Resisting Element Stiffness Variation Effects on Wood Diaphragms

Designers must also consider the effects of rotation in wood-frame buildings. Rotation must be considered when large cantilevers or stiffness variations occur at resisting lines. This is common when semi-subterranean parking bays have masonry retaining walls at the rear and a parallel resisting line with large openings at the opposite side and comparatively much less stiffness. Significant engineering judgment is required to properly distribute forces when diaphragms are rigid in the longitudinal direction and flexible in the transverse axis based on their deflection compared to the story drift of the resisting elements in that direction. The correct distribution involves considering differences in rigidities for both the shear walls and the diaphragm.

3.1.7 Mistakes of the Past due to Evolving Code Provisions

Existing buildings often contain construction materials and are based on design assumptions that modern building codes no longer allow. These problems include reliance on higher than actual material strengths, excessive height-to-width ratios of shear wall segments, designs using combined strengths for material types with different stiffness properties, and materials or techniques no longer given allowable strengths. Examples of these problems include:

- allowable strengths for gypsum products and three-ply plywood;
- 3½:1 allowable height-to-width ratios for wood structural panels;
- combining plaster, gypsum and plywood strengths in the same direction; and
- walls braced with wood lath and plaster, horizontal siding or let-in wall bracing.

3.1.8 Recognizing the Danger of Non-Ductile Sheathing Materials

Many existing multi-story residential buildings extensively used gypsum wallboard and portland cement plaster for shear wall construction. Although these products provide superior fire resistance, their limited deformation tolerance and low shear capacity make them of little value for resisting the dynamic and cyclic nature of earthquake loading. Tests have shown that an eight-foot by eight-foot panel of gypsum wallboard can displace only ½ inch before

failure occurs. The combination of this small ultimate displacement and the low strength at which it occurs, illustrates why gypsum and cement products provide so little ductility or earthquake energy absorption capacity. In contrast, wood structural panels resist higher loads for more cycles and to larger ultimate displacements. This explains their superior ductility compared to gypsum and plaster products as demonstrated during the Northridge earthquake. Structures whose walls were sheathed with significant amounts of plywood dramatically outperformed their prevailing minimum code designed counterparts that relied extensively on gypsum and plaster construction for shear walls.

3.1.9 Identifying Shear Walls With Excessive Deflection Potential

In the past, many designers relied solely on the use of the code's 3½:1 allowable height-to-width ratios to adequately limit deflection in individual shear walls. The use of these tall and narrow shear-wall segments lowers system ductility performance, causes excessive deflection resulting in significant damage and can lead to collapse failures. Some buildings barely escaped collapse during the moderate Northridge earthquake when they had these narrow panels (3½:1) around openings for ground level parking. The performance of narrow panels in a major earthquake is of serious concern. Recent tests have shown that wider wood structural panel shear walls (2:1) can have ultimate displacements as little as one inch. This is one reason why the 1997 UBC requires a maximum 2:1 height-to-width ratio for wood structural panel shear walls in Seismic Zone 4.

3.1.10 Weakness from Combining Different Material Strengths

When materials having different ultimate displacement capacities are used together, they will not continue to resist loads together beyond the failure of the material with the smallest displacement capacity. This points out the fallacy of using sheathing materials with different ductile properties to provide resistance at the same level or direction. Previous designs often relied on both low-capacity plaster and gypsum products and the more flexible and ductile wood structural panels to resist lateral loads simultaneously. For example, plywood would brace the interior corridor walls, drywall would brace the dwelling separation walls and plaster would brace the exterior walls. When the building moves horizontally during an earthquake, all sheathing elements will resist earthquake-induced loads only until the plaster and gypsum products reach their smaller ultimate displacement and fail. Beyond that point the remaining more flexible wood structural panel will be the only shear wall construction left to resist the entire seismic load. Because that load may be substantially more than the plywood shear walls were originally designed for, the plywood walls can be suddenly overwhelmed to failure. In some buildings this problem is compounded because the plywood may only be provided along one direction, leaving only gypsum board and plaster to provide resistance in the other direction.

3.1.11 Identifying Structural Problems Caused by Original Construction Quality

No discussion of earthquake performance can underestimate the important contribution of quality construction work. Contractors on residential or apartment buildings, who strictly adhere to the requirements found in construction drawings and specifications, are somewhat rare. Over the years, most contractors gain a familiarity with different design methods and seek to make economic substitutions when possible. This constant seeking of "or equal" materials is not always done with the designers knowledge or an understanding of the significant effects that certain substitutions can cause.

3.1.12 Nail Substitutions

The most common material substitution is nail type. Engineers may specify an 8d common nail but often will find all

sheathing nailed with 8d clipped head cooler nails. These nails have smaller shank diameters and heads. Tests have shown that clipped nail heads reduce shear wall ductility by one-third. Cooler nails are twenty-percent less stiff than common nails at the same pennyweight.

3.1.13 Bolted Connections with Oversized Holes

Another common problem in construction quality is the oversizing of holes for bolted connections. This is critical at sill plate and hold down connectors. Additional slip at either of these points can result in splitting of the sill plate. When oversized holes allow the hold down to slip, the seismic overturning force will lift up the wall until the bolt engages the wood. Often, this movement is sufficient to split the plate between the hold-down post and the nearest sill plate anchor bolt due to bending. Construction of hold downs that were not carefully inspected during construction may be unreliable to resist earthquake loads.

3.1.14 Unregulated Penetrations of Shear Walls

One other major concern for construction quality in existing buildings is the unrestricted use of penetrations in shear wall construction. Shear walls near plumbing or major electrical runs often have studs with large notches and plates that are completely or almost completely discontinuous. These construction practices often result in a shear wall with poor nailing and shear transfer capacity along top and bottom plates. Openings through shear walls are sometimes added during the original construction to accommodate ductwork, and alterations to relocate or add doors or windows during the life of the building can also reduce shear wall lengths and change the location where a hold-down is needed.

3.1.15 Substitution of Lumber Grades and Species

Finally, the substitution of lumber grades and species during construction is commonplace and problematic. Hem fir and redwood sill plates are common and the actual grade of end studs or posts for hold-down design will probably be unknown. The effect of these substitutions on shear wall capacity can be significant as shown in Tables W3-1 and W3-2.

Table W3-1 Allowable Shears in Wood Structural Panels

Wood Structural Panel		Common Nail Size	Nail Spacing at Panel Edges	Allowable Shears, lbs./ft. Based on Lumber Species		
Panel Grade	Thickness			Douglas fir-larch	Hem-Fir	Redwood Open Grain
Structural 1	15/32 inch	8d	4	430	355	280
Structural 1	15/32 inch	8d	3	550	450	360
Structural 1	15/32 inch	10d	3	665	545	430

Table W3-2 Effect of Lumber Grade on Hold Down Capacity

Hold-Down Product	Stud Size	Douglas Fir-Larch Grade	Catalog Value	Tension, lbs.	Compression, lbs.		
				Net Section	8 Ft. Stud	Sill or Sole Plate ⊥ to Grain	
						Hem fir	DF-L
HD 8A	4 x 4	No. 1	7,460	12,078	7,695	4,961	7,656
		No. 2		10,288	7,209		
		Construction		7,753	6,840		
		Standard		4,473	6,327		
		Stud		5,905	5,965		

3.1.16 Typical Retrofit Design Scheme

After cataloging all of a building's potential problems based on age, structural irregularities, proximity to faults and quality of construction, the experienced designer can devise a proper retrofit design subject to field verification. One approach is to design the building to current code and determine what areas of the building need improvement. The designer should establish the scope of retrofit work considering the owner's available budget and cost benefit ratios for incremental improvements. Designs should follow the basic principles discussed below and consider some alterations as minimums for retrofit work.

A. Making the Strength, Stiffness and Ductility Compatible

Whenever retrofit construction improves an element in the lateral force resisting system, all elements in the associated load path should also be capable of resisting or transmitting forces to that level. Shear-wall strength will not increase by adding plywood sheathing unless hold downs and shear transfer connections are present and can provide the same capacity in pounds per foot as the plywood. On the other hand, diaphragms are often too expensive to upgrade because of interior partitions. When shear walls must transfer their forces through diaphragms due to vertical plane offsets, the capacity of the diaphragm will limit the amount of shear that upper floor shear walls can transfer to the lower elevation shear walls.

B. Wood Structural Panels Work Best

One of the most effective seismic retrofit materials is a wood structural panel. The superior performance of structures braced with plywood during recent earthquakes illustrates the true deformation compatibility of wood structural panels with wood framing. Flexible wood sheathing on wood framing with common nails provides optimum ductility. This is the retrofit material of choice for shear walls. However, due to the tearing of some 3/8-inch 3-ply sheathing materials in shear walls damaged during the Northridge earthquake, retrofit

designs should specify a minimum nominal thickness of ½ inch.

C. Controlling Story Drift

Shear wall deflection analysis should consider the relative rigidity of different pier lengths in the same line of resistance. When relative rigidity is taken into account, a longer wall segment will take more load than a simple ratio of the wall pier length to total shear wall length analysis would indicate. Since the nail contribution to shear wall deflection is not linear, calculation of deflection must use an iterative process to determine the converging deflection for all wall segments. For wood structural panels, the deflection at strength levels should not exceed one inch for eight-foot high walls. This limit is stricter than some modern building codes but is consistent with FEMA standards using current test results.

D. Considering Capacity of Adjoining Elements and Foundations for Moment Frames

The use of steel moment frames at garage door openings can provide necessary strength and stiffness if properly compared to the design load and adjacent resisting elements in parallel lines. Designers should use caution to insure that any required fixity exists when required at the base. While engineers can assume fixity for columns embedded in grade beam construction of sufficient depth and reinforcement, columns whose fixity is based on depth of embedment of isolated pad footings in soil should be investigated for the effects of soil elasticity. Significant rotation of the column footing can occur in the soil. The contribution of the soil compression to column rotation can be sufficient to meet, or exceed, the drift limit before the column's own deflection under load is calculated. In short, the designer should avoid this technique unless justified by competent geotechnical and structural analysis.

E. Significance of Collectors

To insure a complete load path, seismic retrofit designs should provide collectors. Collectors must transfer the seismic forces originating in other portions of the building to the elements within the scope of the retrofit work that provide resistance to those forces. Engineers should design this critical, but often overlooked element, to higher force levels than its connecting elements to assure effectiveness.

F. Importance of Structural Observation for Existing Buildings

Once the property owner commits to the retrofit project, designers should do as much investigative work on the existing structural conditions as the occupancy of the building will allow. Often it is too expensive to verify all retrofit design assumptions until the construction is under way. The retrofit design must contain enough flexibility to adjust when retrofit construction reveals adverse conditions in the existing building. Engineers frequently assume all framing is Douglas Fir-larch, but can find significant portions built with redwood and Hem Fir. Designers assume that the lumber is in good structural condition, but there may exist damage from water intrusion, fungus or insect infestation. Contractors do not always place things as shown on the construction drawings. Because so many design assumptions need field verification for an existing building, designers must perform structural observation during the retrofit work to ensure their assumptions are correct, that the design details are properly provided by the combination of new and existing elements, and that the retrofit will work as intended.

3.2 Out-of-Plane Anchorage Retrofit of Diaphragm to Wall Connections in Concrete and Masonry Wall Buildings

3.2.1 Retrofit Standards

The purpose of building codes for new structures is primarily to prevent personal injury and secondarily to protect property. On the other hand, with the exception of the *NEHRP Guidelines for the Seismic Rehabilitation of Buildings* (ATC, 1997), most retrofit standards aim to protect human life only. This purpose usually results in less stringent requirements for existing buildings. Because the weakest structural element, which can also be very expensive to replace or upgrade, often limits the benefits of a retrofit project, many seismic retrofits, in effect, provide about 75% of the requirements for new buildings. A principal value of seismic retrofits is they reduce the risk of earthquake damage even when their criteria is less stringent than current requirements for new buildings.

3.2.2 Understanding the Anchorage System for Existing Buildings

The anchorage system is the collection of structural elements that connects a masonry or concrete wall to a wood diaphragm. These structural elements include anchors, connectors, framing members, sheathing and fasteners. Anchors may be existing cast-in-place bolts or newly added expansion or adhesive products. Connectors can be manufactured steel hardware or specially designed items. Framing members may be dimensioned lumber, engineered wood products or steel sections that are rafters, girders or parts of a truss. Sheathing may be wood structural panels, dimensioned lumber or metal decking. Fasteners can be bolts, wood screws or nails of various lengths, head types and diameters. All of these structural elements have different strength and stiffness properties. Retrofitting of the anchorage system must consider the differences between a variety of existing structural elements and new elements added during the retrofit, and determine how they will behave together as a system.

3.2.3 Failures in the Anchorage System

In the past, the anchorage of concrete and masonry walls to wood diaphragms have failed by cross-grain bending and tension in wood ledgers, shear cone pullout of anchors from walls, splitting of wood members at bolted connections and the fracture of light gage metal hardware at bends, joints and bolt holes. Solutions to these problems include those listed below.

- use of compatible load factors for embedded anchors, steel connectors and wood connections
- increased minimum wall anchorage loads and sub-diaphragm depths
- increased minimum framing member thickness at anchors
- continuous cross ties between diaphragm and sub-diaphragm chords
- use of symmetrical connections
- stronger wall connections at pilasters locations

3.2.4 Choosing the Proper Type of Anchor

Although existing cast-in-place anchor bolts may provide support for connectors when testing or analysis establishes their tension values, most retrofits of the anchorage systems use new drilled-in-anchors to connect to the existing masonry or concrete walls. These proprietary products come in three basic types: expansion, bearing and adhesive. Each anchor type has its unique performance characteristics. Expansion anchors can adequately resist shear loads in concrete but their outward displacement during tension loading normally precludes their use. Bearing anchors provide higher tension resistance, but also require large edge distances. Adhesive anchors are susceptible to strength degradation with elevated temperatures, but have approval for use in both masonry and concrete.

When aesthetics do not govern the anchor choice, the most effective anchors consist of through-bolts with properly sized bearing plates on the exterior wall. When appearance is important, most retrofits use adhesive anchors drilled to within one inch of the exterior wall surface. Because of the limited approvals for expansion anchors in masonry, adhesive anchors are also the drilled-in-anchor of choice for masonry.

The strength of drilled-in-anchors relies on the depth of embedment, edge distance and strength of the concrete or masonry base material. Contractors should be made aware that anchor strength is quite sensitive to reduced edge distances and to installations that are less than their required depth.

3.2.5 Connectors and Their Stiffness

The hardware that connects the wood diaphragm framing member to the threaded rod or bolt from the anchor is the connector. Most failure studies of the anchorage system have concentrated their attention on this most visible element. Failure modes for connectors include not only breaking and tearing but also excessive stretching or deformation. When connectors elongate too much, ledgers can fail in cross grain bending or tension and framing members in joist hangers may lose their vertical support.

Proper design and installation of connectors depends on understanding the importance of both the strength and stiffness properties of connectors. Product approvals establish maximum allowable strength values for designers without always reporting the accompanying stiffness properties. Connectors in wall anchorage systems should deform no more than 1/8 inch under allowable stress design seismic loads. The allowable tension capacity at this deformation level may be as little as one-third of the manufacturer's published allowable tension capacity.

Stiffness frequently governs the allowable load on the connector. Stiffness varies depending on material strength and gage, and the configuration of reinforcing side plates. Substitution of connector types during construction can defeat any careful stiffness analysis by the designer. Poor installation from oversized bolt holes in the wood member or slack in rods or straps can also reduce the effective stiffness of the connector.

Configuring connectors in symmetry eliminates flexural stresses and deformation of the member. When connectors are attached to the vertical side of framing members, paired connectors are the normal and preferred practice to eliminate these problems (Figure W3-1). When paired connections cannot be used, other members must be designed to resist the eccentric forces that are generated in the direction perpendicular to the seismic loads.

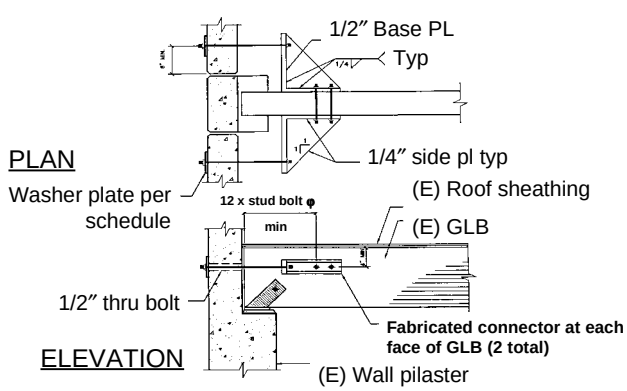

Figure W3-1 Out-of-Plane Anchorage Retrofit at Wall Pilaster

3.2.6 Benefits of Thicker Framing Members

Generally the thicker the framing member is, the larger the allowable tension load will be. Splitting of wood members at bolted connectors was common in buildings damaged by the 1994 Northridge earthquake. As a result, new buildings in Seismic Zones 3 and 4 require minimum 2-1/2-inch actual (3x nominal) thickness framing members at wall-to-diaphragm anchorage connections. Replacement members in existing building retrofits should follow this same rule.

Replacement of all framing members is not generally economically feasible in existing buildings. Frequently, the retrofit of wall anchorage systems must use existing lumber that is two-inch nominal or in old buildings it could be a full two inch actual thickness. Designers must ensure that the combined gravity and seismic loads do not exceed the allowable tension capacity of the wood member. Keeping the tension demand within allowable values of the existing framing members may require reduced anchor spacing or adding additional framing members along side the existing member. Adding additional framing members is common retrofit practice when connecting to engineered wood products like I-joists.

3.2.7 Existing Sheathing and Sub-diaphragms

Many diaphragms in older buildings are constructed with one-inch sheathing placed perpendicular or diagonally across framing members. The allowable capacity of these diaphragms are lower than diaphragms sheathed with wood structural panels. To safely distribute the wall anchorage forces in these weaker diaphragms, the required depth of the sub-diaphragm, and the corresponding number of continuity ties between framing members, must increase. If the diaphragm is too weak to resist the wall anchorage forces, additional sheathing and fasteners may be used to strengthen it. Sometimes additional sheathing may be fastened to the underside of the framing members. More often, it is applied over the existing sheathing after finishes, such as roofing, are removed.

Adding sheathing to more modern buildings is rare because the diaphragms of these buildings are constructed with wood structural panels. These diaphragms usually have adequate strength in the high shear zones where wall anchorage occurs. However, retrofit designs should limit sub-diaphragm shears to a minor percentage of the available strength of these diaphragms due to orthogonal effects. For diaphragm shear strengths of 600 to 800 pounds per foot, sub-diaphragm shears should not exceed 250 pounds per foot. A similar percentage should be used for diaphragms with lesser capacities. This approach will enlarge the sub-diaphragm, but will normally avoid adding sheathing or fasteners.

3.2.8 Continuous Cross-Ties and Subdiaphragm

The lack of existing continuous ties across the full width of the diaphragm allows tearing of the sheathing and diaphragm fracture at framing member joints. Modern building codes require diaphragm cross ties from the wall anchorage point to the chord of the sub-diaphragm. There is strong evidence that this may not provide adequate development length to resist the actual anchorage forces. Diaphragms require continuous cross ties to resist the tensile forces caused by shearing stresses in the diaphragm. Requiring full span cross ties spaced at the girder spacing will confine sections of the diaphragm and should eliminate this problem. Accepted retrofit standards for concrete and masonry wall anchorage require continuous cross ties across the entire diaphragm at spacing not to exceed 24 feet, or the girder spacing, whichever is greater.

3.2.9 Pilaster and Girder Connections

The anchorage force at pilasters is increased by the two-way slab action of the exterior wall panels and this force is applied directly

to the girder or truss member at the top of the pilaster. As shown in the 1994 Northridge earthquake, most existing connections of pilasters to girders are inadequate to resist this concentration of forces. A significant part of the problem lies in the insufficient edge distance for anchor bolts at the top of the pilaster. This can be true even with confinement from ties or exterior plate reinforcement. Most often, symmetrical tension ties to the walls is the best solution to strengthen the girder connection (Figure W3-2). Because construction joints often occur at pilasters, edge distance can also be a problem, but it is generally much better than relying on anchors embedded in the pilaster top.

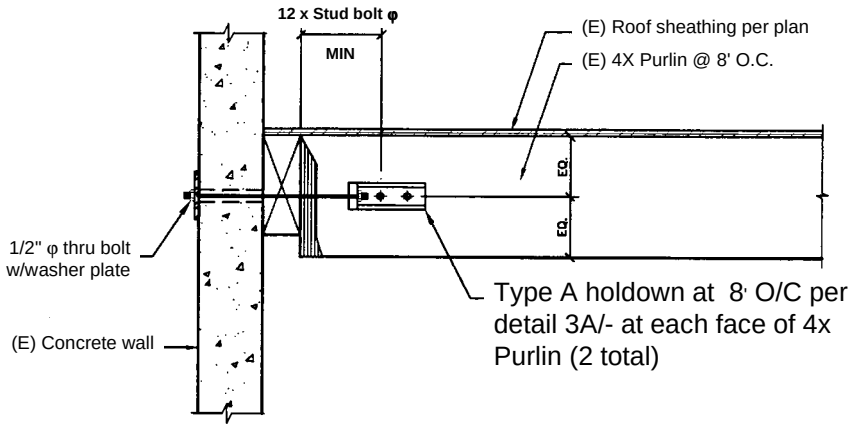

Figure W3-2 Typical Flexible Diaphragm to Concrete Wall Anchorage

Job Aid:
Inspection Checklist for Wood Frame Shear Walls

1. ■ **Verify from the structural framing plans and architectural floor plans the location and length of all shear walls**

2. ■ **Verify the nailing of the sheathing agrees with the shear wall schedule**

   - ❍ Nail Type (common, galvanized box);
   - ❍ Nail Diameter (8d or 10d);
   - ❍ Nail Length (minimum penetration into framing 12 times nail diameter)
   - ❍ Spacing Along Each Edge of Each Piece of Sheathing (6", 4", 3" etc.)
   - ❍ Nail Head Shape (clipped heads not permitted)
   - ❍ Nail Placement
     - __ Driven flush but not overdriven
     - __ Minimum 3/8" from sheathing edge to center of nail
     - __ View the stud side to check for nails that missed framing
     - __ Staggered along edges where spacing is 3 inches o.c. or less
     - __ Edge nails into hold-down post

3. ■ **Verify sheathing material agrees with the structural notes**

   - ❍ Type (Plywood or OSB);
   - ❍ Grade (APA Rated Panel or APA Rated Panel - Structural I) and
   - ❍ Thickness (3/8", 15/32")
   - ❍ Number of Plys (If specified for plywood)

4. ■ **Verify lumber size and grade agrees with the structural notes**

   - ❍ Framing Grade of Studs & Posts (Stud, Construction, No. 2, No. 1);
   - ❍ Lumber Species (Douglas Fir Larch, Hem-Fir)
   - ❍ Framing Size (3x studs, sill at heavily nailed edges, 2-2x, 4x or 6x at HD posts)

5. ■ **Verify bottom of wall shear transfer (sill/ sole plate) connection is based on the structural notes or specific sections and details**

   - ❍ Nailing size and spacing of wall sole plate to floor framing below from shear wall schedule; verify nails penetrate framing below
   - ❍ Foundation sill bolt diameter and spacing from shear wall schedule or notes
   - ❍ Bolts not less than 7 bolt diameters from ends of sill piece; not more than 12 inches from ends; not less than 1 inch from edge of sill plate; not less than 1 1/2 inches to edge of concrete foundation.
   - ❍ Verify square plate washer is used on bolts.
   - ❍ Verify bolt hole in sill plate is not more than 1/16" larger than bolt diameter.

Job Aid:
Inspection Checklist for Wood Frame Shear Walls (continued)

6. ■ Verify top of wall shear transfer connection by looking at the shear wall schedule and typical sections at roof and floor level

- ❍ Location of edge nail row along top plate of lower wall and sole plate of upper wall, and if required, along the rim joist or blocking
- ❍ Size and spacing of framing clips, when required, from top plate to floor or roof framing, with all nail holes filled
- ❍ Where 10 d nails are required for the sheathing, and when edge nailing is required into the rim member, the minimum rim member thickness is 1 3/4 inch. Therefore a nominal 2x is NOT sufficient.

7. ■ Verify top plate splice connections along shear wall lines, not only those occurring directly above the shear wall

- ❍ Check for a detail or note on framing plans calling for typical or special plate splices.
- ❍ Verify the strap size (gage thickness and length) number of rows of nails, and total number of nails per the product manufacturer's catalogue
- ❍ Verify straps are centered on the splice and have all nail holes filled.
- ❍ Splices are needed anywhere that top plates are interrupted (by perpendicular beams or headers in the plane of the wall)

8. ■ Verify Hold-Down Installation

- ❍ Confirm locations per Framing and Foundation Plans (usually, but not always, are hold-downs required at each end of a shear wall)
- ❍ Verify minimum Post Size and Lumber Grade
- ❍ Verify equal number of nails to upper and lower wall framing for Nailed Strap Type Hold-downs Spanning Floor Framing
- ❍ Verify bolt hole diameter through posts is not more than 1/16 inch larger than the actual bolt diameter.
- ❍ Verify bolts heads or nuts are not countersunk into the post, unless specifically permitted
- ❍ Verify a washer is installed under the nut on side of the post opposite the HD
- ❍ Verify nuts are tight on all bolts, including the anchor bolt into the foundation and the ends of threaded rods spanning between floor levels.
- ❍ Anchor bolts and threaded rods should not be bent. HD location should be installed to minimize the length of threaded rods.
- ❍ Verify all bolt diameters are as specified either by the hold-down product manufacturer's catalogue or as specified on the drawings.
- ❍ Verify prior to concrete pour the length of embedment of anchor bolts and the embedded end condition (e.g., L-hook, J-hook, nut and square plate washer, hex headed bolt) match the drawings
- ❍ Verify anchor bolt clearance from edges and ends of footings as specified on the drawings.

Table of Contents - Concrete and Masonry Construction

Briefing Paper 4: Seismic Response of Concrete and Masonry Construction

Lesson C1 The Load Path in Concrete and Masonry Construction

1.1 The Load Path in Concrete and Masonry Construction ----------C-1

Lesson C2 Improving the Earthquake Performance of Concrete and Masonry Construction

2.1 Masonry Construction---------- C-11
2.2 Reinforced Concrete Construction ---------- C-25
2.3 Reinforcing Steel ---------- C-43

Lesson C3 Seismic Rehabilitation of Concrete and Masonry Construction—Special Considerations

3.1 In-Situ Testing and Material Properties ---------- C-49
3.2 Unforeseen Conditions---------- C-53
3.3 Fiber-Reinforced Composite Systems ---------- C-57

Job Aids

Designer Checklist for Masonry Construction;
Inspection Checklist for Masonry Construction;
Class B Lap Splice Table

List of Figures – Concrete and Masonry Construction

C1-1 Diaphragm failure in parking structure caused by the Northridge earthquake ---------- C-1

C1-2 Earthquake forces on diaphragms and collectors ---------- C-2

C1-3 Earthquake forces on shear walls ---------- C-4

C1-4 Shear-controlled failure from Northridge earthquake ---------- C-4

C1-5 Frame damaged in Northridge earthquake ---------- C-5

C1-6 Beam/column joint damage in concrete frame ---------- C-6

C1-7 The effect of confinement on column ductility ---------- C-7

C1-8 Soft-story failure at Olive View Hospital caused by the San Fernando earthquake ---------- C-8

C1-9 Earthquake forces on foundations ---------- C-8

C1-10 Shallow foundation ---------- C-9

C1-11 Deep foundations ---------- C-9

C2-1 Simple grout field test ---------- C-14

C2-2 Simple mortar field test ---------- C-15

C2-3 Toothing and racking ---------- C-18

C2-4 Wall layup patterns ---------- C-19

C2-5 Various joint types ---------- C-20

C2-6 Typical connections of intersecting walls and embedded columns --------- C-21

C2-7 Permissible variation from true to line ---------- C-21

C2-8 Permissible variation of element in the plan ---------- C-22

C2-9 Permissible variation of element in the elevation ---------- C-22

C2-10 Permissible variation from plumb ---------- C-22

C2-11 Permissible variation from level, top surface of bearing walls ---------- C-22

C2-12 Permissible variation from level for head joints ---------- C-22

C2-13 Permissible variation of grout space ---------- C-22

C2-14 Things to check when inspecting shotcrete ---------- C-38

C2-15 ASTM table showing rebar grading ---------- C-43

C2-16 Weak column, strong beam condition ---------- C-44

C2-17 Beam flexural capacity ---------- C-44

C2-18 Crushing and spalling of concrete column with widely-spaced spiral reinforcing ---------- C-44

C2-19 Rebar oxidation contributed to this spalling---------- C-45

C2-20 Identification marks, line system of grade marks---------- C-49

Briefing Paper 4

Seismic Response of Concrete & Masonry Buildings

Part A: Ground Shaking and Earthquake Loads

Introduction

Briefing Paper 4, *Seismic Response of Concrete and Masonry Buildings*, consists of four parts. This Part A provides a brief overview of how earthquakes affect reinforced concrete and masonry buildings. Part B describes the detailed response of a floor (or roof) diaphragm to the horizontal forces generated within it, and how the forces are transmitted horizontally to the building walls and frames. Part C describes the vertical load path carrying the horizontal loads down the building walls and frames, through the foundations and into the ground. Part D explains that as well as providing the load paths, some specific components must have the ductility necessary to handle the large distortions from major earthquakes.

The objective of this Briefing Paper 4 is to facilitate improvements in design and construction quality by providing architects, engineers, building officials, plan checkers, and inspectors with an appreciation of the importance of earthquake-resistant design and construction of reinforced concrete and masonry buildings.

Earthquake Performance of Reinforced Concrete and Masonry Buildings

Masonry construction has been used for centuries, and reinforced concrete buildings have been around for about one hundred years. Such buildings use masonry or concrete walls or frames to carry vertical loads and to resist earthquake shaking. The floors and roof can be made of concrete or wood. Concrete buildings built to modern design standards are likely to perform well in earthquakes, whereas some older concrete buildings have seismic deficiencies. Modern reinforced masonry buildings are also expected to perform well in earthquakes. Unreinforced masonry buildings, often called URMs, built until 1933 in California and still being constructed in other parts of the nation, are dangerous in earthquakes.

Reinforced concrete and masonry buildings have dynamic properties (mass, stiffness, and strength) that affect how hard they shake in response to earthquake ground motion (see Figure 1). Just like a tuning fork, each building has a natural tendency

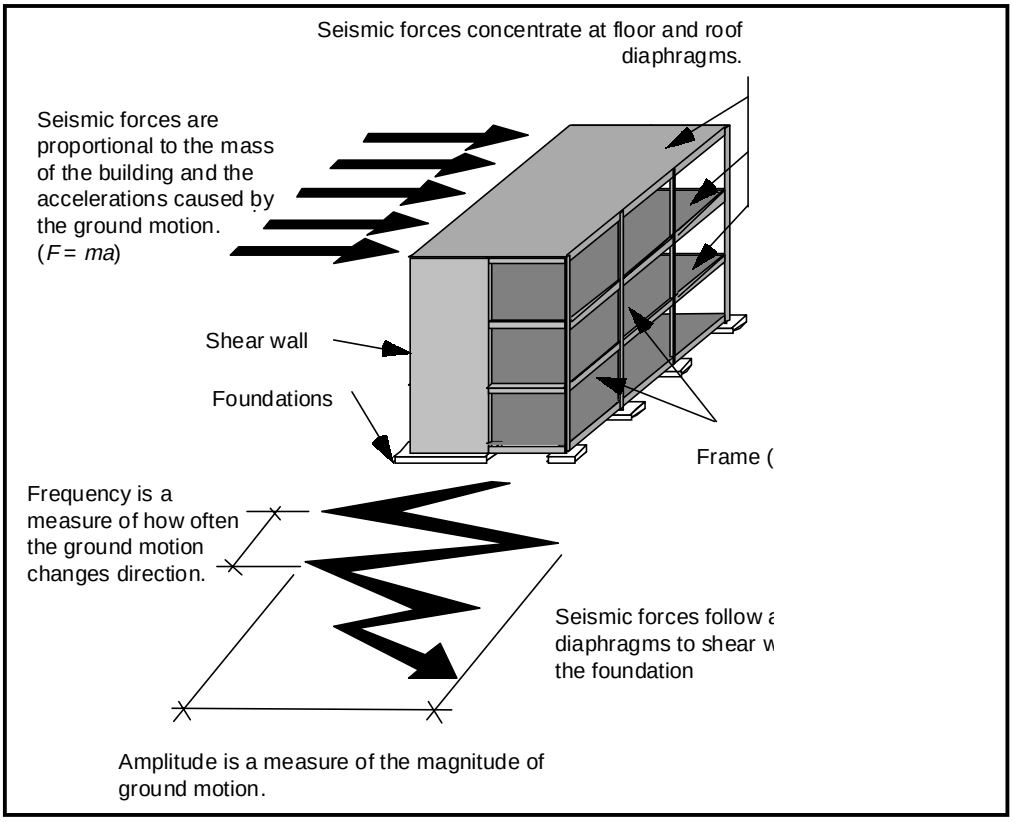

Figure 1. The effects of earthquake shaking on concrete and masonry buildings

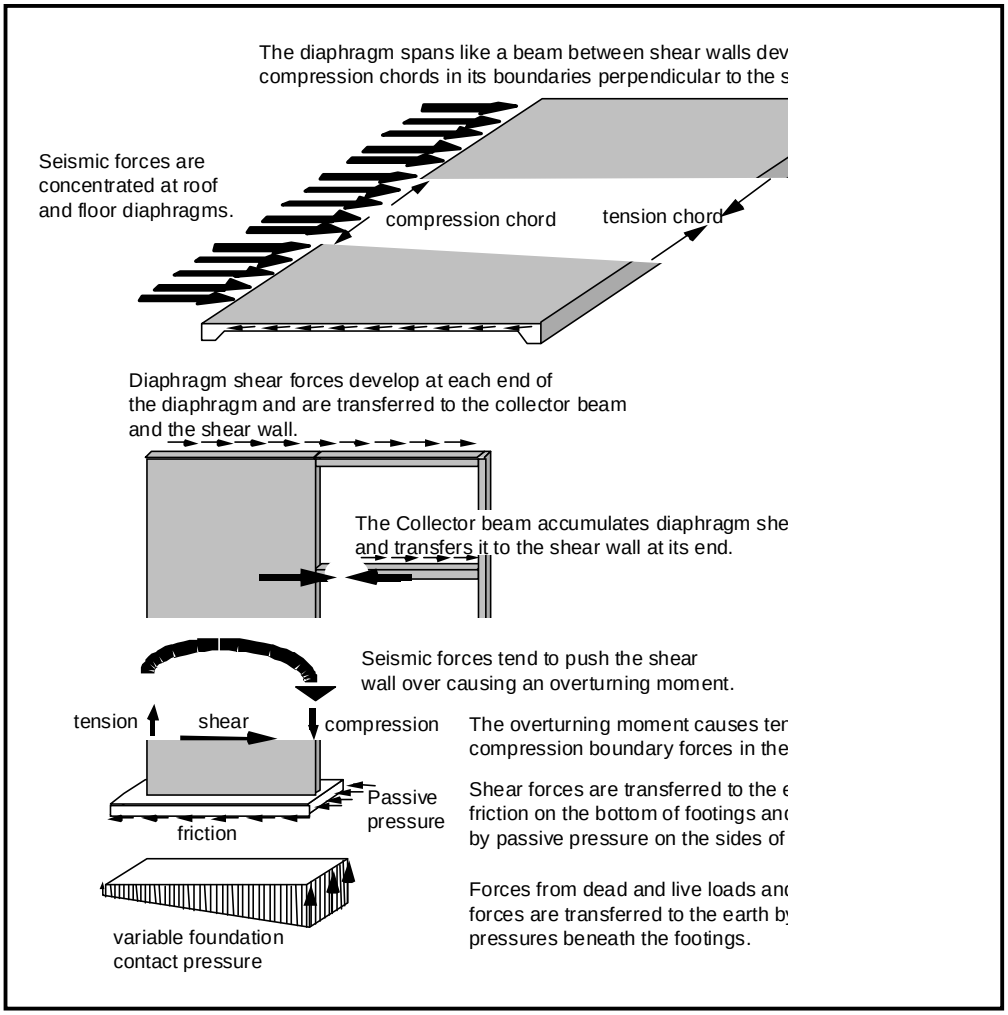

Figure 2. The load path for seismic forces in concrete and masonry buildings

to vibrate at its fundamental frequency. If one of the frequency components of the ground motion is near the fundamental frequency of the building, accelerations (and forces) are amplified as the building is forced to resonate. As the ground motion changes direction, the forces within a building also change direction, causing shaking or vibrations in the building.

A well-designed and well-built reinforced building has a reliable load path (see Figure 2) that transfers these forces through the structure to the foundation where the soil can resist them.

Because the floor and roof elements (diaphragms) are relatively heavy, a large portion of the building mass is concentrated in these elements. For structural analysis purposes, the mass of other building components, including the walls, beams, columns, furniture, and other building contents, are normally presumed concentrated at the floor and roof levels. Horizontal earthquake forces are usually resisted by either walls or frame elements. At the base of wall and frame elements, foundation components transfer the earthquake forces to the earth.

The diaphragms, walls, frames, and foundations of a building are the key elements along which engineers visualize a load path through the structure. The key links between these elements are also important components of the chain that makes up the horizontal and vertical load paths for the horizontal loads. The earthquake resistance of a building is only as strong as the weakest link in the load path.

About this Briefing Paper Series

Briefing papers in this series are concise, easy-to-read summary overviews of important issues and topics that facilitate the improvement of earthquake-resistant building design and construction quality.

This briefing paper was prepared by the ATC/SEAOC Joint Venture, a partnership of the Applied Technology Council (ATC) and the Structural Engineers Association of California (SEAOC). Funding for the series was provided by the California Seismic Safety Commission, Proposition 122 Retrofit Practices Improvement Program.

Copies of Briefing Papers can be downloaded from ATC's World Wide Web site (www.atcouncil.org), or are available from:

ATC/SEAOC Joint Venture
c/o Applied Technology Council
555 Twin Dolphin Drive, Suite 550
Redwood City, California 94065

Briefing Paper 4

Seismic Response of Concrete & Masonry Buildings

Part B: The Role of Diaphragms

Introduction

Briefing Paper 4, *Seismic Response of Concrete and Masonry Buildings*, consists of four parts. Part A provides a brief overview of how earthquakes affect reinforced concrete and masonry buildings. This Part B describes the detailed response of a floor (or roof) diaphragm to the horizontal forces generated within it, and how the forces are transmitted horizontally to the building walls and frames. Part C describes the vertical load path carrying the horizontal loads down the building walls and frames, through the foundations and into the ground. Part D explains that as well as providing the load paths, some specific components must have the ductility necessary to handle the large distortions from major earthquakes.

Diaphragm Response

Floor and roof diaphragms span between shear walls of concrete or masonry, or frames of concrete or steel. When subjected to lateral seismic loads, diaphragms effectively respond like beams responding to vertical floor loads. The schematic provided in Figure 1 illustrates the two fundamental types of forces produced at the diaphragm edges (shear, and tension or compression). Seismic loads pushing against the long side of the diaphragm (Figure 1) produce shear forces (parallel to the seismic forces) at each end of the diaphragm (in the short direction) and are transferred to collector beams and shear walls (or to vertical frames) at those locations. On the side of the diaphragm opposite the seismic forces, tension develops in the chord, and on the side on which the forces are acting, compression develops. Reverse situations apply on reversal of the seismic load. When loading is applied in the direction parallel to the long axis of the diaphragm, the forces act similarly. Just how these forces are resisted within the diaphragm itself depends on its construction.

Engineers classify diaphragms into two groups for design purposes. Floors and roofs con-

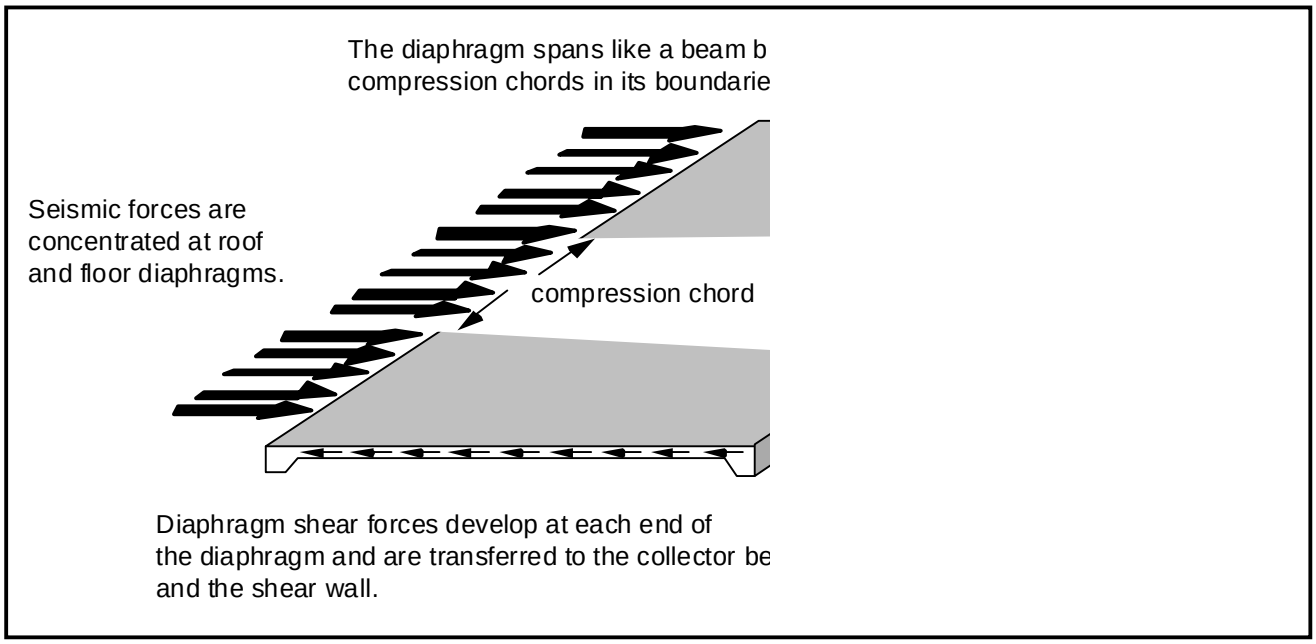

Figure 1. Diaphragm seismic loads and resulting forces

structed of reinforced concrete or concrete fill on metal deck are designated as rigid diaphragms (that is, rigid in their own plane). The concrete of the diaphragm is effective in resisting shear, as long as it is tied together with reinforcement (rebar). This is usually rebar laid out in both directions at a uniform spacing. Welded wire fabric is an alternative. Most rigid diaphragms have beams at their four edges. Concrete beams are already reinforced with longitudinal rebar. Often this reinforcement is sufficient to resist chord forces. In some cases, however, additional steel must be added. In retrofit construction, inadequate chord reinforcing may require the addition of steel plates to concrete beams. When the vertical seismic elements are steel frames, chord forces are typically resisted by the steel beams at the diaphragm edges.

Floors and roofs of wood construction are flexible diaphragms. Shear forces within the diaphragm are resisted by the sheathing, which might consist of decking or flat boards in older buildings, or plywood in newer construction. The shear capacity is controlled by the nailing of the sheathing to the supporting wood framing. In retrofit construction, additional nailing is sometimes required to increase the capacity. In other cases, plywood is installed to replace or reinforce the existing sheathing. Chord forces are usually resisted by wood or steel beams at the edges of the diaphragm. Sheet metal straps between wooden chord members may be required to resist tension forces.

Forces similar to chord forces also can develop around openings (e.g., stairwells or duct work) in both rigid and flexible diaphragms. This is why the edges of these openings often are reinforced with additional longitudinal reinforcing steel in concrete diaphragms, or steel members or straps in wood construction.

Transfer of Diaphragm Forces

Forces in diaphragms must be transferred to the surrounding walls or frame elements. These forces include diaphragm shear forces acting in the plane of the wall or frame.

Several mechanisms are used to accomplish this shear transfer from concrete diaphragms. One is known as shear-friction. This concept is based on the assumption that the diaphragm cannot slide with respect to the wall or beam component without yielding of the reinforcing steel that crosses the separation between the two. The shear capacity of the connection between the diaphragm and the wall or frame component is a function of the amount of steel crossing the construction joint and the roughness of the surface between the two. Another mechanism for transferring shear forces is called dowel action. This assumes that all the shear forces are transferred from the diaphragm into the wall or beam through the reinforcement acting in shear like an anchor bolt. Forces can be large enough to require that the construction joint itself have built-in bumps or deformations to provide dowel action.

In flexible diaphragms, shear forces are usually transferred by nailing from the sheathing to a wood beam called a ledger that is bolted to the wall or frame.

Out-of-Plane Forces

The connections between diaphragms and their supports also transmit earthquake forces that tend to push and pull these supports away from the diaphragms. These out-of-plane forces act perpendicularly to the plane of the wall or frame, causing direct tension and compression across the connection to the diaphragm.

Out-of-plane forces are not usually a problem for rigid diaphragms, but they have caused serious problems in past earthquakes for flexible diaphragms. For example, wood ledgers connecting roof diaphragms to exterior walls have repeatedly failed in past earthquakes. This behavior has resulted in the collapse of tilt-up buildings, as illustrated in Figure 2. One solution is to install blocking with straps to prevent side-grain bending of the ledger. This can be done for both new and existing construction. Whatever the mechanism, it is important in the field to pay close attention to the joint between diaphragms and wall or frame components. No matter how strong or stiff the diaphragm and its supporting components are, the lateral-force-resisting seismic elements will not have a chance to act if the connection between the two fails.

Figure 2. Failure of connection of wood diaphragm to concrete wall in Northridge earthquake

Collectors or Struts

Shear forces in diaphragms are sometimes not transferred directly into a shear wall or lateral-load-resisting frame. For example, a supporting shear wall might not be as long horizontally as the edge of the diaphragm. The edge of the diaphragm that extends beyond the wall will be supported only by a beam. The shear force in the diaphragm is transmitted to the beam which "collects" the forces and transfers them to the wall. A beam that functions in this way is called a collector or a strut. For concrete diaphragms, additional reinforcing might be added to collectors, particularly where they frame into the wall. For flexible wood diaphragms, wood or steel beams are often added to serve as collectors in both new and retrofit construction.

Resources for Additional Reading

ABK Joint Venture, 1984, *Methodology for Mitigation of Seismic Hazards in Existing Unreinforced Masonry Buildings*, Topical Report 08, Agbabian Associates, El Segundo, California.

ATC, 1997, *Seismic Evaluation and Retrofit of Concrete Buildings*, funded by the California Seismic Safety Commission, Applied Technology Council, Report ATC-40, Redwood City, California, 1997.

Bolt, B.A., 1997, *Earthquakes: A Primer*, W.H. Freeman and Company, San Francisco.

Hart, G.C., Priestley, M.J.N., and Seible, F., 1992, "Masonry Wall Frame Design and Performance," *The Structural Design of Tall Buildings*, John Wiley and Sons, Inc., New York, New York.

Paulay, T., and Priestley, M.J.N., 1992, *Seismic Design of Concrete and Masonry Buildings*, John Wiley and Sons, Inc., New York, New York.

About this Briefing Paper Series

Briefing papers in this series are concise, easy-to-read summary overviews of important issues and topics that facilitate the improvement of earthquake-resistant building design and construction quality.

This briefing paper was prepared by the ATC/SEAOC Joint Venture, a partnership of the Applied Technology Council (ATC) and the Structural Engineers Association of California (SEAOC). Funding for the series was provided by the California Seismic Safety Commission, Proposition 122 Retrofit Practices Improvement Program.

Copies of Briefing Papers can be downloaded from ATC's World Wide Web site (www.atcouncil.org), or are available from:

ATC/SEAOC Joint Venture
c/o Applied Technology Council
555 Twin Dolphin Drive, Suite 550
Redwood City, California 94065

Briefing Paper 4

Seismic Response of Concrete & Masonry Buildings

Part C: The Role of Shear Walls and Frames

Introduction

Briefing Paper 4, *Seismic Response of Concrete and Masonry Buildings*, consists of four parts. Part A provides a brief overview of how earthquakes affect reinforced concrete and masonry buildings. Part B describes the detailed response of a floor (or roof) diaphragm to the horizontal forces generated within it, and how the forces are transmitted horizontally to the building walls and frames. This Part C describes the vertical load path carrying the horizontal loads down the building walls and frames, through the foundations and into the ground. Part D explains that as well as providing the load paths, some specific components must have the ductility necessary to handle the large distortions from major earthquakes.

Shear Wall Seismic Behavior

Reinforced concrete and masonry shear walls are vertical seismic elements that resist lateral loads in their plane. They are like vertical diving boards extending upward from the foundation. The earthquake forces act horizontally in the plane of this vertical cantilever. After the diaphragm shear force has been transmitted into the shear wall, the shear wall behaves like an almost rigid diaphragm to resist these forces. In reinforced walls, the reinforcing bars (rebar) are usually laid out in a regular rectangular pattern, with bars running in both horizontal and vertical directions at uniform spacing.

Shear walls develop bending forces as well as shears, and all forces are transmitted to the foundation elements, which resist the tendency of the seismic forces to push the wall over in its own plane (Figure 1). This moment, which wants to rotate the shear wall, is called an overturning moment. It increases from the top to the bottom of the building. This is why reinforced shear walls have extra vertical bars placed at the ends. This boundary reinforcing resists the bending forces, alternating vertical tension and compression, in the wall. In new construction, there are usually smaller bars placed like column ties around the boundary reinforcing to ensure confinement and ductility of the concrete. The concept of confinement and ductility is discussed more in Part D of Briefing Paper 4. Bending forces can also develop around large openings in walls. This is why additional trim bars are added at the edges of wall openings. Horizontal construction joints in walls rely on shear transfer mechanisms such as built-in bumps or blocks, like the vertical joints in rigid floor diaphragms.

Damage patterns in reinforced walls following earthquakes reflect their relative strengths in shear and bending. Walls that are stronger in bending than shear exhibit shear damage:

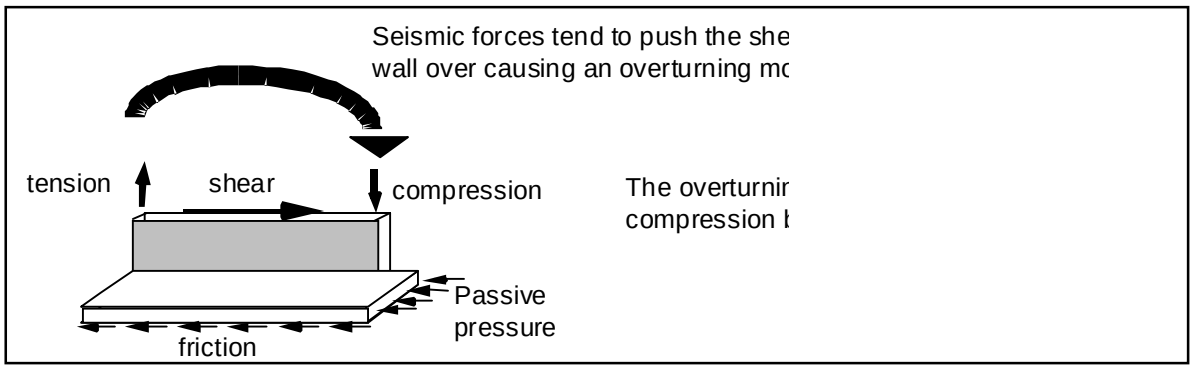

Figure 1. Resistance to overturning moment and shear at foundation level.

inclined, often X-shaped, cracking patterns. This behavior is acceptable if there is adequate shear reinforcing; however, in the absence of adequate reinforcing, shear-controlled walls can lose strength rapidly. Retrofit measures include the addition of concrete overlays to increase the shear strength of walls. Walls weaker in bending than in shear are typically more ductile as they suffer bending damage, but do not fail abruptly. Bending cracks in walls tend to be horizontal and at the base.

Experience from past earthquakes has shown that it is very important that columns be stronger than beams.

Sometimes walls in the same plane are connected together with horizontal beams, called spandrels or coupling beams, at floor and roof levels. During earthquakes, these components can also sustain damage similar to that observed in walls. New construction standards require reinforcing patterns that favor the more desirable, ductile behavior.

In new construction, all shear walls are required by code to be reinforced. Unreinforced masonry walls are common, however, in older existing construction. These walls have a limited capacity to resist shear forces. Their behavior initially is similar to that of the reinforced walls, but shear-controlled behavior, usually evidenced by X-cracks, is particularly perilous in URM construction (Figure 2). Bending-controlled behavior in these walls can result in less onerous rocking of individual walls or wall piers. URM buildings require strengthening to resist earthquakes. Reinforced concrete or shotcrete overlays on existing walls are a common retrofit technique. In other instances, new reinforced walls or steel braced frames are added to the building.

Frame Seismic Behavior

Frames rely on a different mechanism to resist lateral loads. Frames are composed of vertical components (columns) and horizontal components (beams). As earthquake forces displace the frame sideways, the rectangles that were defined by the beams and columns tend to be distorted into parallelograms. The joints do not permit this, and the resulting distortion causes the beams and columns to bend and develop forces called bending moments. Bending moments cause tension on one face of a beam or column and a corresponding compression on the opposite face. In reinforced concrete and reinforced masonry frames, longitudinal reinforcing bars are installed to resist the tension forces. The shear forces are resisted by the concrete or masonry, and by the smaller transverse reinforcing bars placed around the longitudinal bars. Transverse reinforcing is horizontal (called ties) in columns and vertical (called stirrups) in beams. Transverse reinforcement is particularly important in frames to provide ductility and confinement, which is discussed in Part D of this Briefing Paper 4.

Experience from past earthquakes has shown that it is important that columns be stronger than beams. Damage is then concentrated in the beams and avoided in the columns, which are required to support, with no damage, the vertical

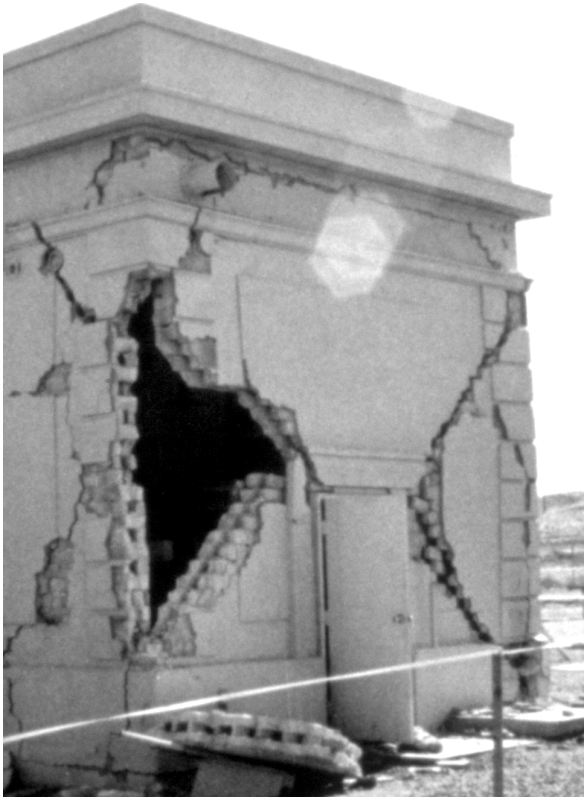

Figure 2. Earthquake-induced shear cracks in unreinforced masonry wall building.

loads. The appropriate relative strength in shear and bending is also important for frames. Some serious failures have occurred when deep beams cause shear failures in so-called "short columns". Joints in frames between beams and columns are subject to high shear forces and have suffered damage in past earthquakes (see Figure 3).

Foundation Behavior

Foundations can be shallow or deep. Shallow foundations are supported by the vertical pressure of the earth directly below. They can be square or rectangular conventional spread footings placed beneath individual columns, or continuous, relatively narrow, rectangular footings underneath walls or frames. Deep foundations have either steel or concrete piles driven into the ground, or concrete piers that have been drilled and poured in place. These components are supported vertically by end bearing and by skin friction along their length. Footing components are often connected together by grade beams or slabs on grade. Shear forces are transferred to foundation components from walls and frames. Dowels from the footings must match in total cross-section, both boundary reinforcing in walls and bending reinforcing in frame columns to resist overturning. In fact, all vertical reinforcing in walls and frames must be matched by foundation dowels. Great care should be exercised in the field to make sure that these dowels are in place.

All vertical reinforcing in walls and frames must be matched by foundation dowels. Great care should be exercised in the field to make sure that these dowels are in place.

Seismic shear forces are transmitted to the earth in two ways. First, horizontal friction develops on the lower face of shallow footings and slabs (See Figure 1). Second, if the seismic forces are greater than the shear capacity, the building is normally restrained from movement by passive soil pressures acting on the sides of footings, grade beams, piles, piers, basement walls, or other similar components.

Overturning forces on shallow foundations are

Figure 4. Beam-column joints damaged during 1994 Northridge earthquake.

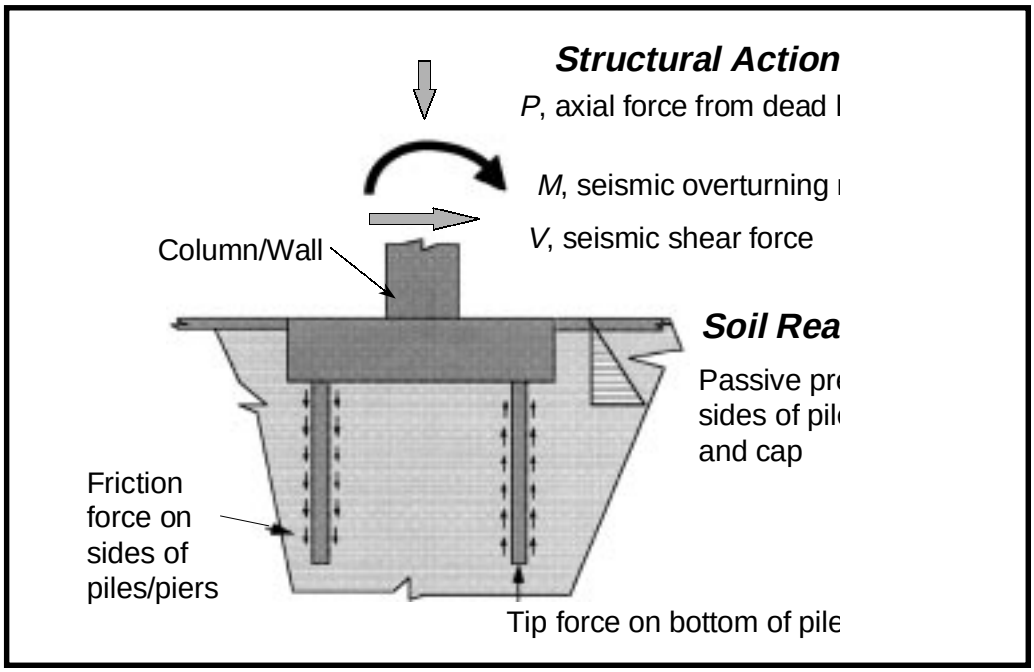

Figure 4. Seismic loading of deep foundations.

resisted by a redistribution of the pressure supporting the vertical loads. In all earthquakes, since all soils have some elasticity, rocking occurs. In major earthquakes, as the limit of the restoring capability is approached, more rocking can occur. This is not always a bad phenomenon, since it limits the level of the internal building forces. Overturning forces in deep foundations (see Figure 4) cause an increase in some pile or pier loads and a decrease in others. In fact, the initial compression in some edge locations might be overcome, resulting in tension in the piles or piers located there.

Resources

ABK Joint Venture, 1984, *Methodology for Mitigation of Seismic Hazards in Existing Unreinforced Masonry Buildings*, Topical Report 08, Agbabian Associates, El Segundo, California.

ATC, 1997, *Seismic Evaluation and Retrofit of Concrete Buildings*, funded by the California Seismic Safety Commission, Applied Technology Council, Report ATC-40, Redwood City, California, 1997.

Bolt, B.A., 1997, *Earthquakes: A Primer*, W.H. Freeman and Company, San Francisco, 1997.

Hart, G.C., Priestley, M.J.N., and Seible, F., 1992, "Masonry Wall Frame Design and Performance," *The Structural Design of Tall Buildings*, John Wiley and Sons, Inc., New York, New York.

Paulay, T., and Priestley, M.J.N., 1992, *Seismic Design of Concrete and Masonry Buildings*, John Wiley and Sons, Inc., New York, New York.

About this Briefing Paper Series

Briefing papers in this series are concise, easy-to-read summary overviews of important issues and topics that facilitate the improvement of earthquake-resistant building design and construction quality.

This briefing paper was prepared by the ATC/SEAOC Joint Venture, a partnership of the Applied Technology Council (ATC) and the Structural Engineers Association of California (SEAOC). Funding for the series was provided by the California Seismic Safety Commission, Proposition 122 Retrofit Practices Improvement Program.

Copies of Briefing Papers can be downloaded from ATC's World Wide Web site (www.atcouncil.org), or are available from:

ATC/SEAOC Joint Venture
c/o Applied Technology Council
555 Twin Dolphin Drive, Suite 550
Redwood City, California 94065

Briefing Paper 4

Seismic Response of Concrete & Masonry Buildings

Part D: The Importance of Ductility

Introduction

Briefing Paper 4, *Seismic Response of Concrete and Masonry Buildings*, consists of four parts. Part A provides a brief overview of how earthquakes affect reinforced concrete and masonry buildings. Part B describes the detailed response of a floor (or roof) diaphragm to the horizontal forces generated within it, and how the forces are transmitted horizontally to the building walls and frames. Part C describes the vertical load path carrying the horizontal loads down the building walls and frames, through the foundations and into the ground. This Part D explains that as well as providing the load paths, some specific components must have the ductility necessary to handle the large distortions from major earthquakes.

Ductile Behavior

While the concept of horizontal and vertical load paths to transmit horizontal seismic forces to the foundation is enlightening, it is not the whole story of good seismic performance. In large earthquakes, forces are expected to exceed the yield strength of the links in the load paths. Good behavior requires that the links deform plastically while dissipating energy, without breaking in a brittle and abrupt manner. This is a property known as ductility. When you bend a pencil, it snaps without warning. Do the same to a coat hanger and it will bend without breaking. The coat hanger is ductile.

Good behavior requires that the links deform plastically while dissipating energy, without breaking in a brittle and abrupt manner.

Concrete and masonry are inherently nonductile. Both can satisfactorily take compression, but added reinforcing steel is required to resist any tension. Reinforcing steel is also used to confine concrete. Confinement enhances both strength and ductility in several respects. Confinement can be visualized as a cardboard tube holding marbles. The marbles themselves are not very stable, but when placed in a surrounding tube they can actually support loads. This type of confinement is important where there are zones of high compressive or shear forces. Confinement is also important in zones where longitudinal steel is spliced. As the two pieces of spliced, deformed reinforcing are pulled apart in opposite directions, there is a tendency for the surrounding concrete to split and expand. The confinement restrains this splitting and expansion, and it allows the splice to be effective in developing the tensile strength of the bars.

Confinement is usually provided by what is termed special transverse reinforcing (see Figure 1). These are small-diameter ties in columns, and stirrups in beams, placed at close intervals. Proper confinement is particularly critical at the joints between beams and columns. At these points, when both building interstory drifts and joint rotations are high, tension must be transmitted from the top of the beam on one side of the joint to the bottom of the beam on the other. At the same time, the tension must be transmitted from one side of the column to the other through the same region of the joint, known as the panel zone. These actions give rise to high shear forces in the panel zone. The joint is a congested volume of both vertical and horizontal transverse reinforcing, and longitudinal reinforcing.

Resources

ABK Joint Venture, 1984, *Methodology for Mitigation of Seismic Hazards in Existing Unreinforced Masonry Buildings*, Topical Report 08, Agbabian Associates, El Segundo, California.

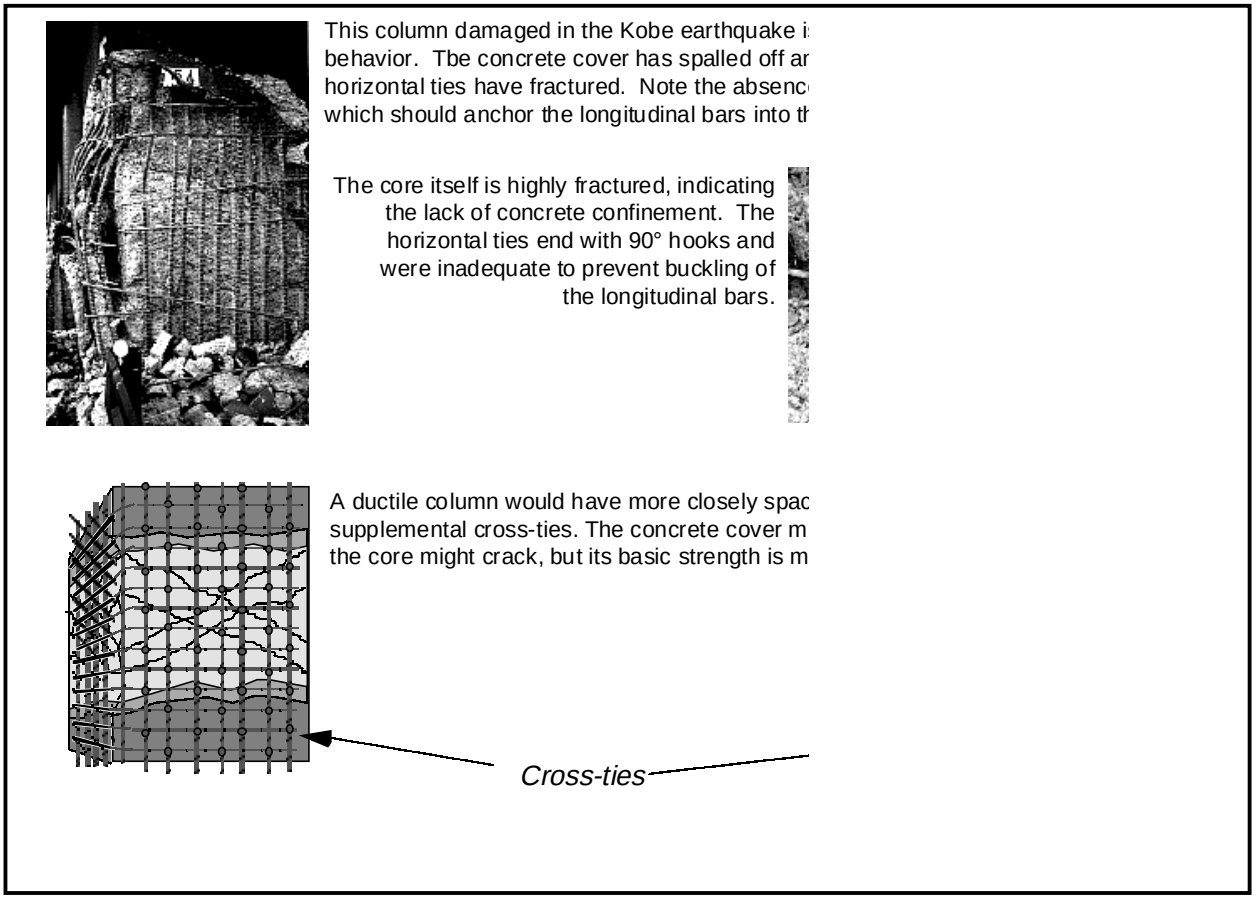

Figure 1. The effect of confinement on column ductility

ATC, 1997, *Seismic Evaluation and Retrofit of Concrete Buildings*, funded by the California Seismic Safety Commission, Applied Technology Council, Report ATC-40, Redwood City, California, 1997.

Bolt, B.A., 1997, *Earthquakes: A Primer*, W.H. Freeman and Company, San Francisco, 1997.

Hart, G.C., Priestley, M.J.N., and Seible, F., 1992, "Masonry Wall Frame Design and Performance," *The Structural Design of Tall Buildings*, John Wiley and Sons, Inc., New York, New York.

Paulay, T., and Priestley, M.J.N., 1992, *Seismic Design of Concrete and Masonry Buildings*, John Wiley and Sons, Inc., New York, New York.

About this Briefing Paper Series

Briefing papers in this series are concise, easy-to-read summary overviews of important issues and topics that facilitate the improvement of earthquake-resistant building design and construction quality.

This briefing paper was prepared by the ATC/SEAOC Joint Venture, a partnership of the Applied Technology Council (ATC) and the Structural Engineers Association of California (SEAOC). Funding for the series was provided by the California Seismic Safety Commission, Proposition 122 Retrofit Practices Improvement Program.

Copies of Briefing Papers can be downloaded from ATC's World Wide Web site (www.atcouncil.org), or are available from:

ATC/SEAOC Joint Venture
c/o Applied Technology Council
555 Twin Dolphin Drive, Suite 550
Redwood City, California 94065

Lesson C1:
The Load Path in Concrete and Masonry Construction

1.1 The Load Path in Concrete and Masonry Construction

This section discusses the main structural seismic elements in concrete buildings and masonry buildings that accumulate and transfer earthquake forces. They comprise the lateral load path.

1.1.1 Diaphragms

Issues and Concerns. The load path for reinforced concrete and masonry buildings starts at the floors and roof. Poor performance of floor and roof elements can have catastrophic consequences.

A. Discussion and Examples:

These elements carry vertical load and distress can lead to full or partial collapse (see Figure C1-1). Floor and roof elements are referred to as diaphragms and are most often constructed of reinforced concrete, or of concrete fill on a metal deck. (Some diaphragms in concrete and masonry buildings are wood. These are covered in the lesson on Wood Construction.) Because diaphragms are relatively heavy, a large portion of the building mass is concentrated in these elements. For structural analyses purposes, the masses of other elements of the building, including the walls, beams, columns, furniture, and other building contents are usually approximated as occurring at the floor and roof levels. Diaphragms act like beams as they span generally between a pair of shear walls or frames. If the diaphragms are not designed and constructed properly, the results of an earthquake can be serious, as shown in Figure C1-1.

Earthquake forces acting horizontally on diaphragms cause the two fundamental types of beam forces (see Figure C1-2). Shear forces act in a direction opposite to the seismic forces to carry the loads to the shear walls or the frames. The concrete of the diaphragm usually is effective in resisting shear, so long as it is tied together with some type of reinforcement. This usually is rebar laid out in both directions at a uniform spacing. Welded wire fabric is an alternative to accomplish the same thing. If the shear strength of a diaphragm is insufficient, retrofit measures might consist of adding a reinforced overlay of concrete. In some cases steel plate has been used to reduce the added thickness.

Figure C1-1 Diaphragm failure in parking structure caused by the Northridge Earthquake

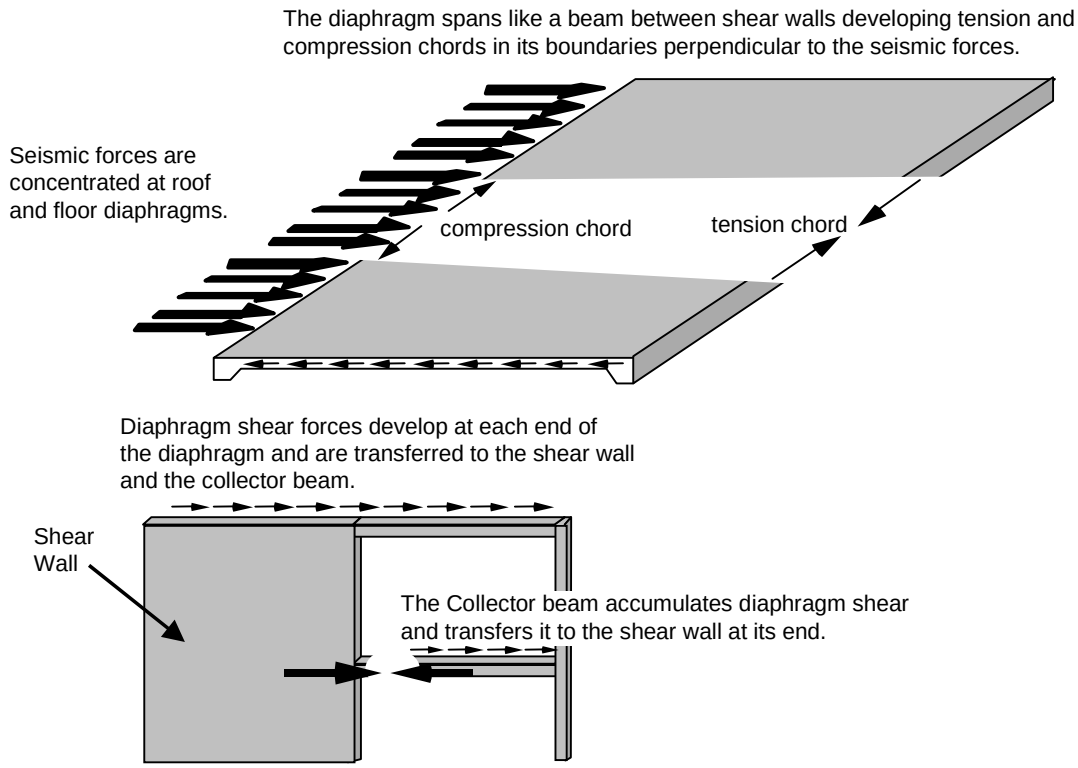

Figure C1-2 Earthquake forces on diaphragms and collectors

The other forces that develop in diaphragms are called chord forces. These occur in a direction perpendicular to the seismic forces as the diaphragm tends to bend horizontally like a beam between shear walls or frames. As this happens, tension chord forces develop at the edge toward which the seismic forces are acting. Equal and opposite compression chord forces develop in the opposite edge. Most diaphragms have beams at all their edges. These beams usually are reinforced with longitudinal reinforcement (rebar). Often this bending reinforcement is sufficient to resist chord forces. In some cases, however, additional steel must be added. Chord forces also can develop in openings in diaphragms for stairwells or duct work. This is why the edges of these openings often are reinforced with additional horizontal, longitudinal reinforcing steel. Similar forces develop at re-entrant corners or other irregularities in diaphragms. Insufficient chord capacity is most often addressed in retrofits with the addition of steel plates or shapes at diaphragm edges.

Shear forces in the diaphragm must be transferred at the edge of the diaphragm to the shear wall or a component beam of a frame. There are several used to accomplish this transfer. One is known as shear-friction. This concept is based on the assumption that the diaphragm cannot slide with respect to the wall or component beam without yielding the reinforcing steel that crosses the separation between the two. The shear capacity of the construction joint between the diaphragm and the wall or beam is a function of the amount of steel crossing the construction joint and the roughness of the surface between the two.

Another mechanism for transferring shear forces is called dowel action. This concept assumes that all the shear forces are transferred from the diaphragm into the wall or beam through the reinforcing acting in shear like an anchor bolt in shear. Sometimes forces are large enough to require that the construction joint itself have built-in bumps, or blocks, to provide doweling action.

Whatever the mechanism, it is important in the field to pay close attention to the joint between a diaphragm and a supporting wall or beam. Retrofit measures to strengthen this joint might include the installation of a steel angle with drilled anchors into the wall and adjacent slab. No matter how strong the diaphragm and the wall or beam are, they will not have a chance to act if the connection between the two fails.

Sometimes shear forces in diaphragms are not transferred directly into a shear wall or lateral-load-resisting frame. For example, a shear wall might not be as long as the edge of the diaphragm. The edge of the diaphragm that extends beyond the wall might be supported by a beam. In this case, the shear in the diaphragm flows into the beam, which collects the forces and transfers them to the wall. The beam is called a collector. Sometimes collectors are added during retrofit projects by adding steel or concrete beams beneath the diaphragm at the ends of walls.

B. Resolution of Issues Relating to Diaphragms

For designers:

Diaphragms are primarily represented on construction drawings on the roof and floor plans. Added reinforcing at diaphragm edges, collector elements, and other special requirements should also be clearly specified on the plans. Also when these items appear in details or sections, they should be identified generically and the reader should be referred back to the plan for specifics of size, spacing, etc. Check typical joint details for shear transfer between diaphragms and walls. Do they work for all cases?

For plan checkers:

Make sure that the diaphragms are covered in the calculations. Did the engineer look at forces at openings, re-entrant corners, and other irregularities? Is there evidence of reinforcing or special details on the plans? Are the requirements clear?

For inspectors:

Look on drawings for added reinforcing or details at the edges of diaphragms. Anticipate the situation. Are you seeing in the field what you would expect, knowing how diaphragms are meant to perform?

1.1.2 Shear Walls

Issues and Concerns. Shear walls are one of the most common vertical seismic elements in the load paths of reinforced concrete building and masonry buildings. Their behavior often controls the performance of the building during earthquakes.

A. Discussion and Examples:

Shear wall elements are like vertical diving boards extending upward from their foundations. The earthquake forces transferred from diaphragms and collectors act horizontally on this vertical cantilever (see Figure C1-3).

After the earthquake force has crossed the construction joint into the shear wall, it is resisted similarly to the shear forces in the diaphragm. The shear reinforcing usually is laid out in a regular rectangular pattern with bars running in both the horizontal and vertical direction at some uniform spacing. The shear walls also develop bending forces at their boundaries as they resist the tendency of the seismic forces to push the wall over. This tendency to rotate about the base in the plane of the shear wall is called an overturning moment. It increases from the top to the bottom of the building. This is why most shear walls have relatively large and numerous vertical bars placed at their edges. This boundary reinforcing resists the bending forces in the wall. Smaller bars are placed like column ties around the boundary reinforcing to provide for confinement of the concrete in these boundary zones. Bending forces can also develop around large openings in walls. This is why additional trim bars are added at the edges of wall openings. Construction joints in the walls rely on the shear transfer mechanisms discussed for diaphragms.

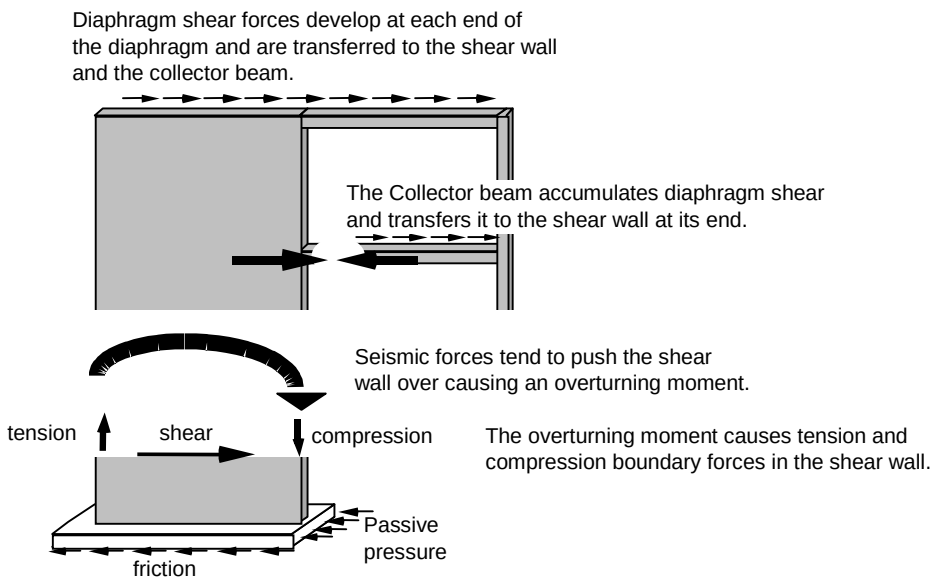

Figure C1-3 Earthquake forces on shear walls

The behavior of walls during earthquakes depends on their relative strength in bending and shear. If the wall is weaker in shear than in bending, it can fail abruptly in shear. Wide cracks along diagonal lines are a sign of shear-controlled behavior (see Figure C1-4). This can be a problem particularly if the wall is supporting vertical load. Bending-controlled behavior is more ductile and is the designer's preferred mode of failure. Bending cracks usually are close to horizontal and occur at the base of the wall.

Shear-wall buildings are relatively stiff and generally tend to resist seismic shaking without large movements. However, some building components are sensitive to movement and can be damaged by even small distortions. Shear walls can rock on their foundations. This can help protect the walls from damage but also can increase distortions in the remainder of the building. This is particularly important for vertical-load-carrying components like columns supporting beams or flat slabs.

Figure C1-4 Shear controlled failure from Northridge Earthquake

Retrofitting of existing shear walls most often consists of adding shear strength to switch the controlling inelastic behavior to bending. This can be accomplished in several ways. A reinforced concrete overlay might be cast, or applied by shotcreting or guniting, against the existing wall. Steel plate can also be used for the same purpose. Recently, carbon fiber or fiberglass fabrics have been considered for installation on wall surfaces to increase shear strength. This technique is not yet common, but shows promise as a cost-effective measure. In some cases, bending resistance is added by the installation of boundary members for walls. If the splices in the reinforcing are inadequate or compressive stresses are high, steel plate or fiber wrapping might be used to increase confinement in existing boundary members. Entirely new shear walls can also be added to existing buildings. In these cases, the connections of

the new wall to the existing diaphragms and other components are often complicated and require the installation of new collectors.

B. Resolution of Issues Relating to Shear Walls

For designers:

Shear walls should be clearly identified on the floor and roof plans. They should also be shown in elevation. This enables the unambiguous specification of boundary reinforcing, trim bars around openings, added shear reinforcing, and other conditions that differ from typical details. Do not rely excessively on typical details with complicated notes to cover various conditions. CADD technology makes it easy to show special conditions separately with a cross reference to a typical detail. Think about how the wall will be built. Considering concrete cover, bar size, aggregate size , and reasonable construction tolerance, is it possible to get what you are specifying?

For plan checkers:

The required base shear coefficient for load bearing walls is higher than nonbearing. Are the walls load-bearing and, if so, is the base shear coefficient correct? Do the calculations include consideration of both shear and bending strength of the walls? Did the designer check the effects of shear wall displacement on other building components? Are important design conclusions (need for boundary reinforcing, added shear reinforcing, or collectors) from the calculations reflected in the drawings?

For inspectors:

Walk through the drawings thinking about how the forces from the diaphragms are transferred to the walls, then through the walls to the foundation. Considering the basic behavior of shear walls and the details on the drawings, does what you see in the field make sense? Are there additional bars around openings and at wall boundaries? Are there dowels for all reinforcing at construction joints?

1.1.3 Frames

Issues and Concerns. Seismic shaking can be resisted in concrete and masonry buildings by vertical-load-bearing frames. Frames must be properly designed and constructed to sustain shaking without serious damage. Some frames have performed very poorly in past earthquakes.

A. Discussion and Examples:

Frames and walls rely on different mechanisms to resist lateral loads. Frames are comprised of vertical components (columns) and horizontal components (beams). As earthquake forces displace the frame sideways, the rectangles that were defined by the beams and columns tend to be distorted into parallelograms. This distortion causes the beams and columns to bend and develop forces called bending moments. Bending moments cause tension on one face of the beam or column and a corresponding compression on the opposite face. In reinforced concrete and masonry frames, longitudinal reinforcing bars are used to resist the tension forces. Frames are also particularly sensitive to the need for ductility and confinement (see Figure C1-5).

Figure C1-5 Frame damage in Northridge Earthquake

In large earthquakes, the loads are expected to exceed the yield strength of the beams and columns of frames. Good seismic behavior requires that these components, particularly the columns, deform inelastically and thereby, dissipate energy, without breaking in a brittle and abrupt manner. This is a property known as ductility. When you bend a pencil, it snaps without warning. Do the same to a coat hanger and it will bend without breaking. The coat hanger is ductile.

Reinforcing steel is used to confine the concrete in frame components. Confinement enhances both strength and ductility in several respects. Confinement can be visualized as similar to the support that a bag provides to marbles within it. The marbles themselves are not very stable, but when placed tightly in a bag they actually can support loads. This type of confinement is important where there are zones of high compressive or shear forces. Confinement also is important in zones where longitudinal steel is spliced. As two pieces of deformed rebar are pulled in opposite directions, there is a tendency for the surrounding concrete to split and expand. Confinement restrains this splitting and expansion and forces the splice to be effective in developing the strength of the bars.

Confinement is usually provided by what is termed "special transverse reinforcing." These are small-diameter ties in columns, and stirrups in beams, placed at close intervals. Particularly critical is the intersection of beams and columns (see Figure C1-6). At these joints, the tension force against reversed bending flows from the top of the beam on one side of the joint to the bottom of the beam on the other. At the same time, the tension flows from one side of the column to the other through the same region of the joint known as the panel zone. These actions give rise to high shear forces in the panel zone and often result in a congested area of both vertical and horizontal transverse reinforcing.

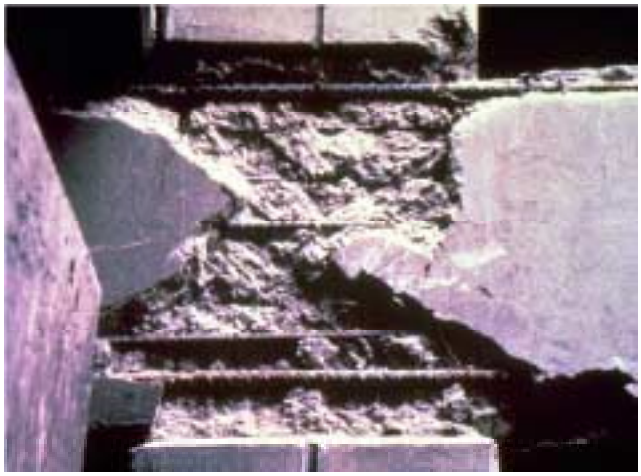

Figure C1-6 Beam/column joint damage in concrete frame

The requirements for ductile frames did not appear in codes until the mid 1970s after the 1971 San Fernando earthquake. Many frames built in the 1950s and 60s are considered nonductile. A common retrofit measure is to replace the lateral system with a new ductile frame or shear wall. This approach, however, is usually quite expensive. For most existing frames, seismic deficiencies include relatively weak columns, inadequate rebar laps, and poor confinement of the concrete (see Figure C1-7). Additional confinement can be used to address each of these. Jacketing is the most common method of adding confinement to an existing concrete component. The beam or column is surrounded by a layer of reinforced concrete or enclosed in steel plate. Recently, fiberglass or carbon fiber overlays have been used for the same purpose.

Another potential deficiency of frames is the existence of a soft or weak story. This is a single story where earthquake displacement and damage tend to concentrate. Often, this is a story that is taller than the others. This type of behavior can lead to formation of a collapse mechanism (see Figure C1-8). To avoid this behavior, it helps to make the beams weaker than the columns so that the damage does not occur in the columns.

B. Resolution of Issues Relating to Frames

For designers:

The beams and columns of frames most often are given names for identification on the plans. Reinforcing is specified in tabular schedules and shown generically in typical details. This complex type of presentation is often unavoidable. The potential for misinterpretation is high. Designers should not hesitate to supplement the drawings with elevations and details highlighting important aspects of lateral-load-carrying frames.

Think about how the frame will be built. Considering concrete cover, bar size, aggregate size, and reasonable construction tolerance, is it possible to get what you are specifying?

For plan checkers:

Is there potential for a soft or weak story? Check the calculations to determine whether the designer considered the relative strength of columns and beams in the analysis. Did the designer verify that framing members that are not part of the lateral-load-carrying system have adequate ductility to accommodate the expected displacements? Are the requirements for special transverse reinforcing correctly and adequately specified on the drawings?

For inspectors:

Carefully review the drawings to determine which of the frames are part of the lateral-load-resisting system. What are the special requirements for these elements in terms of transverse reinforcing, concrete strength, aggregate size, etc.? What is the contractor's plan for placing the concrete?

This column damaged in the Kobe earthquake is an example of nonductile behavior. The concrete cover has spalled off and the widely-spaced horizontal ties have fractured. Note the absence of cross-ties, which should anchor the longitudinal bars into the column core.

The core itself is highly fractured, indicating the lack of concrete confinement. The horizontal ties end with 90° hooks and were inadequate to prevent buckling of the longitudinal bars.

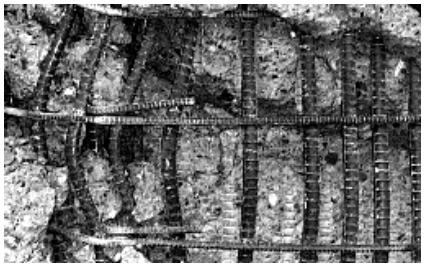

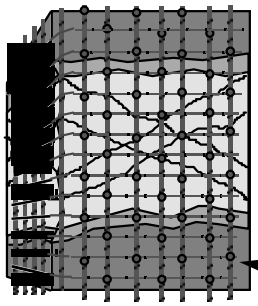

A ductile column would have more closely spaced ties with 135° end hooks and supplemental cross-ties. The concrete cover might spall from such a column and the core might crack, but its basic strength is maintained by adequate confinement.

Cross-ties

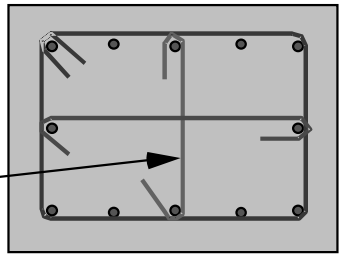

Plan View

Figure C1-7 The effect of confinement on column ductility

Figure C1-8 Soft story failure at Olive View Hospital caused by the San Fernando Earthquake

Does the contractor have the right equipment (pumps, vibrators, etc.) for the plan?

1.1.4 Foundations

Issues and Concerns. Seismic forces in buildings are resisted at the base of shear walls and frames by foundation components (see Figure C1-9). The behavior of the foundation affects the response of the structure.

A. Discussion and Examples:

There are basically two types of foundations used for concrete buildings and masonry buildings, shallow (see Figure C1-10) and deep (see Figure C1-11). Shallow foundations are supported by the vertical pressure of the earth directly below. These can be square or rectangular conventional spread footings placed beneath columns individually, or continuous rectangular footings underneath walls or frames. Deep foundations are either steel or concrete piles driven into the ground, or concrete piers

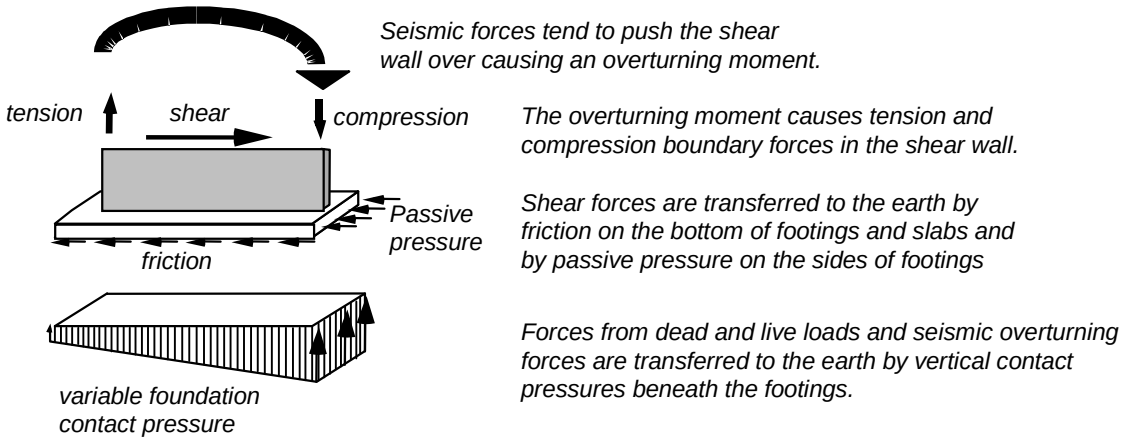

Figure C1-9 Earthquake forces on foundations

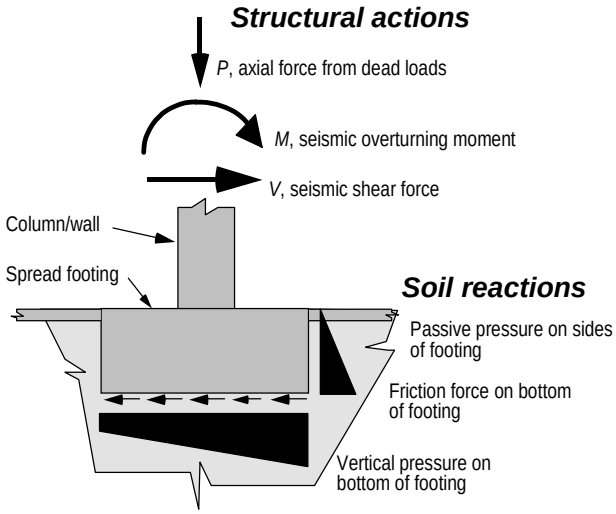

Figure C1-10 Shallow foundation

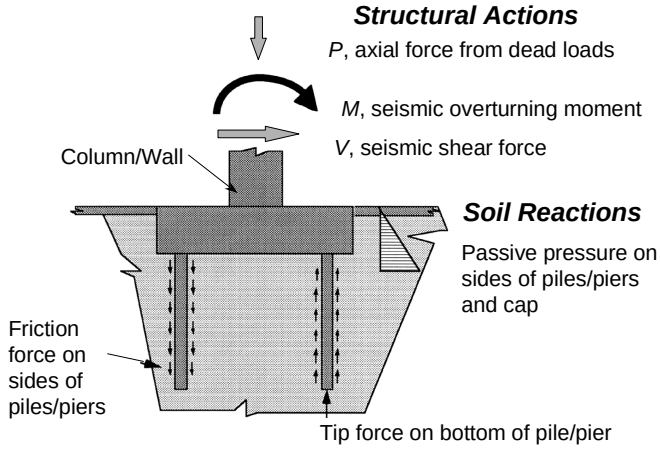

Figure C1-11 Deep foundations

drilled and poured in place. These components are supported vertically by end bearing and skin friction along their length. Footing components are often connected together by grade beams and slabs-on-grade. Shear forces are transferred to foundation components from walls and frames. Overturning forces require dowels from the footings to match boundary reinforcing in walls and bending reinforcing in frame columns. In fact, virtually all vertical reinforcing in walls and frames must be matched by foundation dowels. Great care should be exercised in the field to make sure that these are in place.

Shear forces are transmitted to the earth by two mechanisms. First, horizontal friction develops on the lower surfaces of shallow footings and slabs. If the seismic forces are greater than the shear capacity, the building normally is restrained from movement by passive soil pressures acting on the sides of, for example, footings, grade beams, piles, piers, and basement walls. Overturning forces on shallow foundations are resisted by a redistribution of the pressure supporting the vertical loads. In strong earthquakes this can reach the limit of the restoring capability of the building and rocking can occur. This is not always a bad phenomenon, since it limits the forces that the building sees. Overturning in deep foundations causes an increase in some pile or pier loads and a decrease in others. In fact the initial compression in some locations might be overcome, resulting in pile or pier tension.

In past earthquakes, observed damage to foundations primarily has been due to lateral soil movements such as block sliding initiated by liquefaction. The effects of this type of damage can be reduced by tying foundations together. Common retrofitting measures for this purpose include the installation of grade beams between footing elements. Sometimes existing spread footings are widened to provide increased bearing resistance. Similarly drilled piers or driven piles can be installed.

B. Resolution of Issues Relating to Foundations

For designers:

The force-deformation characteristics of foundations and soils can greatly influence structural behavior particularly for shear-wall buildings. The expert advice of a qualified geotechnical engineer is often necessary for design. Also, field verification of foundation conditions and inspection of construction by the geotechnical engineer can be critical. This is especially true for additions to existing foundations, which may requiring jacking or underpinning of foundation elements.

For plan checkers:

Make sure that the drawings and calculations specify the source of information on soil conditions. Should a geotechnical investigation be required? Do the contract documents require inspection of foundations by a geotechnical engineer? Should they?

For inspectors:

Make sure that the required inspections by the geotechnical and structural engineer are made. In some cases the geotechnical engineer should be present during excavation and installation. Prior to pouring of spread footings make sure that excavations are clean, dry, and free of loose soils material. Proper reinforcing should be secured in place and forms should level, plumb, and securely braced. Check the drawings to make sure that embeds and dowels are installed and secured in proper locations.

1.1.5 Resources

ATC, 1997, *Seismic Evaluation and Retrofit of Concrete Buildings*, Applied Technology Council, ATC-40 Report, Redwood City, California.

ATC, 1997, *NEHRP Guidelines for the Seismic Rehabilitation of Buildings*, prepared by the Applied Technology Council (ATC-33 project) for the Building Seismic Safety Council, published by the Federal Emergency Management Agency, FEMA Report 273, Washington, D.C.

ATC, 1997, NEHRP *Commentary on the Guidelines for the Seismic Rehabilitation of Buildings*, prepared by the Applied Technology Council (ATC-33 project) for the Building Seismic Safety Council, published by the Federal Emergency Management Agency, FEMA Report 274, Washington, D.C.

Hart, G.C., Priestley, M.J.N., and Seible, F., 1992, "Masonry wall frame design and performance," *The Structural Design of Tall Buildings*, John Wiley and Sons, Inc., New York.

Paulay, T., and Priestley, M.J.N., 1992, *Seismic Design of Concrete and Masonry Buildings*, John Wiley and Sons, Inc., New York,.

Lesson C2:
Improving the Earthquake Performance of Concrete and Masonry Construction

2.1 Masonry Construction:

2.1.1 Masonry Materials

Issues and Concerns. Correctly specifying, reviewing and preparing concrete or brick masonry materials are the most basic issues for maintaining quality assurance and control. These materials include the masonry units themselves, the mortar which joins them and the grout that fills the voids within the units.

A. Discussion and Examples:

Masonry unit selection is an important task that should be done early in the project. In an exposed condition, the architect will probably want to specify a certain style and color of units. The units must also meet the engineer's strength requirements and be readily available. If close communication does not occur between the architect and engineer in the schematic or design development phase of the project, each may assume a different material, requiring later redesign. The contractor will most likely not have been selected until well after the choice of unit has been made. It is therefore the design team's responsibility to make sure the material is available in the quantities desired and at a reasonable price. The contractor should not be permitted to use alternative masonry units unless they meet the engineer's and architect's requirements.

Mortar is a stiff mixture of cement, sand, water and lime. Its purpose is to:

- Act as a bedding or setting material for the masonry units,
- Allow the units to be leveled and properly placed,
- Bond the units together,
- Provide compressive and shear strength
- Allow some movement and elasticity between units,
- Seal irregularities in the units and make a weather-tight wall,
- Provide color and architectural texture to the wall.

Grout, a fluid mixture of cement, sand and sometimes pea gravel, is used to fill the voids in the units themselves. Its purpose is to:

- Add compressive and shear strength to the wall,
- Add out-of-plane stability to slender walls,
- Connect units to each other by creating shear lugs,
- Provide coverage for reinforcing steel and make the wall a composite section.

Specification of mortar and grout materials is important to ensure that they:

- Bond well to the masonry,
- Flow and can be placed easily,
- Develop the required strength,
- Look as they are intended,
- Cure properly without cracks.

Improper selection of the mortar, grout, sand, cement, lime and additives can alter all of these properties. Changing one component in a submittal review may require that the entire mix be modified. An engineer, plan checker or inspector should not permit any modification to the mix unless the new proportions have been reviewed in their entirety.

Improper storage on site can cause materials to deteriorate and perform poorly. If proper procedures for storing and monitoring materials are not followed, the contractor may incur costly delays replacing the material. Worse, the contractor may use the material, causing the overall quality of the product to suffer.

Mixing mortars and grouts is typically done on site using plaster, paddle, drum or barrel mixers. Sometimes the mix will come preblended to the site. On site, the mixing process is not as well controlled as it might be in a batch plant. Field testing of mortar and grout is vital to maintaining proper quality control during a project. Masonry elements that contain local pockets of poorly consolidated or improperly mixed mortar or grout may perform poorly. Making repairs to masonry elements once constructed is often difficult and costly.

B. Resolution of Issues Related to Masonry Materials

In the following, references are made to Standards published by the American Society for Testing and Materials, and the *Uniform Building Code*. Refer to the most recent editions.

For the engineer:

The engineer and the architect should meet as early as possible to specify the type of masonry units that will be used on the project. Consider:

- Whether to use clay or concrete masonry,
- The style of the masonry blocks
- The color of the blocks

The engineer should notify the architect of the minimum acceptable block strength. The architect is then responsible for contacting manufacturers to make sure the units are available. To avoid unanticipated effort, the engineer's contract should state that if the type of unit selected does not meet the minimum strength requirements, and design has already proceeded, an extra service may be required to redesign the elements with a different type of block. If the architect wants to use different block styles or colors within a wall, the engineer should make sure the weakest block type still meets the minimum strength requirements.

When specifying masonry units, mortar and grout here are some tips:

Units

- Require that the units conform to ASTM C-652 or UBC Standard 21-1
- Require that the strength meets the design requirements.
- Confirm that the geometry of the units allow for proper reinforcement placement.

Mortar

- Specify Type S mortar, portland cement-lime by proportions. Do not use Type M mortar, mortar cement or masonry cement. Type M mortar is usually too hard and causes joint cracks. With mortar or masonry cement it is difficult to determine whether or not the material meets the design requirements.
- Do not try to specify the mortar strength.

Grout

- Specify the grout using Table 21-B in the UBC, not by specifying a minimum strength of 2000psi. The table proportions will result in a higher strength.
- Add lime for workability if needed according to Table 21-B.

Sand

- Specify ASTM C-144.
- Use a finer mortar sand for a fine grout mix, particularly in thin walls: 4-5 inches.
- Use sand with round grains rather than sharp grains. Round grains have less surface area.

Cement

- Specify ASTM C-150 or UBC Standard 19-1 type I, II or III.
- Do not use air-entrained mixes
- Use low alkali cement as it prevents efflorescence.

Lime

- Specify ASTM C-207 or UBC Standard 21-13
- Do not use air-entrained lime

Additives

- Use a grout aid if needed as a super plasticizer for the grout, but do not use additives in the mortar.

Allow substitutions to the specified materials only if approved by you and if they meet all the design requirements. Create a process for making and reviewing substitutions, including notification of inspectors. Reviewing substitutions should be considered an additional service.

Add to the specifications, requirements for storing materials on site and for field testing.

For the plan checker:

The plan checker should first confirm that the design engineer's specifications are complete for masonry units, mortar and grout, and that they meet the requirements of building code and applicable standards.

Pull charts and tables from *the Uniform Building Code* and Standards and from ASTM standards to help you check mix designs. For each component you should refer to:

- Masonry units: UBC Standard 21-1, ASTM C-652
- Grout : UBC Table 21-B
- Sand: ASTM C-144
- Lime: UBC Standard 21-13, ASTM C-207
- Cement: UBC Standard 19-1, ASTM C-150

For the field inspector:

The main responsibilities of the field inspector are to check that the right material is delivered to the site and that it is prepared properly for placement.

Before any material arrives on site, verify that:

- The design engineer's mix specifications have been properly called out by the contractor.
- All necessary material testing has been performed as required.

Once on site:

- Reject any broken or cracked masonry units, or units that do not conform to the specifications. Minor cracks incidental to usual manufacturing, or small chips are not grounds for rejection.
- Check that the color and texture correspond to the architectural or structural plans.
- Break a unit to check the proportion of broken aggregate and moisture content. If no aggregate is broken or moisture rings are apparent, recheck the laboratory test reports and the age of the units.
- Make sure that units, mortar and grout materials are stored in a level, dry clean place. Mortar and grout materials should be kept in an area where they can be measured properly with minimal amount of contamination.

Check that materials are mixed properly on site.

- Read the manufacturer's specifications for handling and mixing. If there is a discrepancy between the manufacturer's and engineer's specifications, notify the engineer before the mix is prepared.
- Mixes should be as specified on the structural drawings. If an alternative mix is suggested by the contractor, it must be sent to the engineer with plenty of notification and approved. Reproportioning should not be permitted at the time the material is mixed.
- Do not allow the addition of more than ten percent of the mix to include color and pigments. Any additives should be approved by the engineer and architect. When inspecting additives, make sure that:
  - The amount of color is proportioned by weight.
  - The material is mixed about twice the length of time as for uncolored mix.
  - The mixing sequence is always done the same way.
  - Retempering is not done or kept to a minimum to preserve the color consistency.
- The materials supplier is the same for each of the materials throughout the job.
- Mixing of mortar is preferably done with a paddle type mixer. About one-half of the water and sand are put into the operating mixer first. The remainder of the material is then added.
- Allow retempering with water to maintain plasticity, but do not permit splashing water over the mortar.
- Do not allow mortar to be used after 2-½ hours.
- In checking grout make sure that it is mixed properly and for the right amount of time, that there is enough cement, and that the aggregate is graded properly.

Perform field testing as called out in the specifications. Simple field tests can be made as follows:

- Grout (UBC Standards Section 24.2201): On a flat, nonabsorbent base, form a space approximately 3 inches by 3 inches by 6 inches high, i.e., twice as high as it is wide, using masonry units having the same moisture conditions as those being laid. Line the space with a permeable paper or porous separator so that water may pass through the liner into the masonry units. Thoroughly mix or agitate grout to obtain a fully representative mix and place into molds in two layers and puddle each layer with a 1-inch by 2-inch puddling stick to eliminate air bubbles (see Figure C2-1). Level off and immediately cover molds and keep them damp until taken to the laboratory. After 48-hours, have the laboratory carefully remove the masonry units and place them in the fog room until tested in the damp condition.

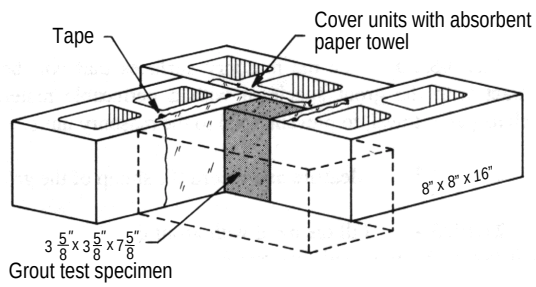

Figure C2-1 Simple grout field test

- Mortar (UBC Standards Section 24.2202): Spread mortar on the masonry units ½ inch to ¾ inch thick, and allow to stand for one minute. Then remove mortar and place in a 2-inch by 4-inch cylinder in two layers, compressing the mortar into the cylinder using a flat end stick or fingers (see Figure C2-2). Lightly tap mold on opposite sides, level off and immediately cover molds and keep them damp until taken to the laboratory. After 48-hours set, have the laboratory remove molds and place

them in a fog room until tested in the damp condition.

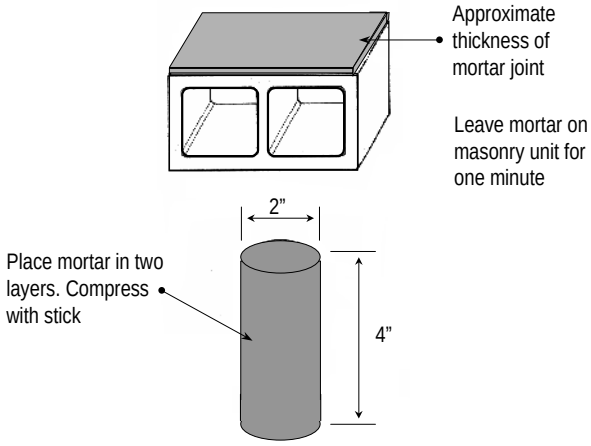

Figure C2-2 Simple mortar field test

Keep a daily log of:

- Weather, temperature and project conditions.
- Materials, construction progress and test specimens. Include the laying of masonry units and grout pours.
- Note special conditions or adverse events.

C. Job Aids and Field Inspection

Included with this curriculum are two Job Aids pertaining to masonry construction: (1) a Designer Checklist for Masonry Construction, and (2) an Inspection Checklist for Masonry Construction, which can help address problems should they arise in the field.

It is recommended that the inspector bring the following items to the site:

- A current set of plans and specifications, including change orders. If possible obtain a half size or reduced set of drawings that are easily portable.
- Applicable codes and standards to which the project was designed and the requirements of the jurisdiction the project is under.
- A list of phone and fax numbers and addresses of architects, engineers and other responsible persons.
- A notebook or log to keep daily notes.
- Necessary forms for filing reports with required agencies.
- Pens, pencils, marking crayon, other markers and erasers.
- A folding rule or retractable tape and a long steel tape.
- String, level and plumb bob to check straightness and plumbness.
- A small trowel and smooth rod for making and rodding mortar and grout samples.
- Samples molds from testing laboratories.
- A watch.
- A publication by the Concrete Masonry Association of California and Nevada, titled *Reinforced Concrete Masonry Inspectors Manual*.

2.1.2 Masonry Placement

Issues and Concerns. Correctly placing concrete or brick masonry materials is important to ensure that good design and material preparation results in well executed, quality construction.

A. Discussion and Examples:

Undoubtedly, workmanship is the most important contributor to quality in masonry construction. Controls on the manufacture of the masonry units and rebar generally are good. Poor quality control in the mixing of grouts and mortars, the layup of the masonry units and reinforcing, and the grouting of cells is not uncommon and can lead to unacceptable or even dangerous performance. It is essential that the workmanship of masonry construction be inspected thoroughly and that potential problems are identified early, before they lead to costly mistakes. Before construction begins the inspector must be sure that the foundations and site are prepared properly

to receive the masonry and that the materials are accessible and have been mixed correctly. Once construction of a masonry element begins, the field inspector's job becomes very important. The inspector must continually monitor progress to check that:

- The masonry bond pattern is as shown on the drawings,
- The units, mortar and grout are placed correctly,
- The mortar joints are of the right thickness and shape,
- The reinforcing is added correctly,
- The overall construction remains within allowable tolerances.

Typically, the question arises as to how much inspection should be provided. At a minimum, the inspector needs to be on site to check the material preparation, foundation and site conditions, the proper placement of reinforcement, and the placement of the grout. Tolerances, bond patterns and mortar joint thickness and shape can be checked after the seismic element is completed. In reality, however, the contractor may make mistakes that can be very difficult to repair once the element is completed. Some of these errors include:

- Not cleaning or roughening the foundation on which the elements are to be placed, resulting in a weak bond at the base.
- Using the wrong bond pattern or making localized mistakes in the layup of the units, thereby resulting in a weaker element than anticipated or an architecturally unacceptable one.
- Using mortar joints that are too thick or too thin, resulting in weaker or visually unacceptable element.
- Using mortar joints with the wrong shape, resulting in non-weathertight joints.
- Placing reinforcing too close to the edge of a cell or in the wrong place, inadequately supporting it, or leaving it out altogether. Also, forgetting to lap or splice rebar until the masonry is laid up too high.
- Laying up out of plumb, possibly resulting in an unstable element or a wall that doesn't square up.
- Forgetting to allow for intersections or corners.
- Forgetting to allow for windows and doors.

It is the contractor's, not the inspector's, responsibility to make sure that the construction is properly sequenced. However, conflicts can be avoided if a second set of eyes is provided to catch mistakes early on. The consequences, if this is not done, may be finger pointing and blame and often a costly redesign and reconstruction effort. To reduce the chance of this, the inspector should be on site as much as possible during the layup of the masonry elements.

Special inspection is required by the code for certain parts of the construction sequence. The engineer should develop a special inspection and testing schedule, summarizing the inspection requirements in sufficient detail to direct the inspectors in the field. This should appear within the general notes or project specifications. Special inspection is required at a minimum during:

- The preparation and taking of any required prisms or test specimens.
- Installation of embedded bolts
- Unit placement
- Placing of reinforcing steel
- Inspection of grout space
- All grouting operations

B. Resolution of Issues Relating to Masonry Placement

For the engineer:

The engineer should meet with the architect, inspector and contractor before construction of the masonry seismic element begins, to

ensure that the following points are understood:

- What the bond pattern is.
- What style of mortar joints is to be used.
- What types of mistakes will and will not be permitted, specifically with respect to joints, intersections, corners, reinforcement layout and splicing.
- What the remedies for these kinds of mistakes will be.
- What the procedure for contacting the engineer is and what kind of response time can be expected.

Once masonry construction begins, the contractor will not want to stop until reaching a convenient point. The engineer will want quick response to questions and resolution of problems that arise. The engineer should be available to help resolve issues, but cannot compromise the integrity of the structure to meet the contractor's schedule. Take the time needed to perform calculations or review submittals. These issues make it all the more important that before construction begins, the engineer lays out and obtains the contractor's acceptance of the ground rules, and clearly describes in the specifications and at a pre-construction meeting what is expected.

Check that the reinforcement does not exceed the maximum permissible size and area relative to the block cells. Larger than #11 rebar is not permitted in masonry construction, and smaller bars should be used where possible to avoid congestion and development length problems. The maximum area of steel is 6% of the cell area or 12% in the location of splices.

For the field inspector:

The inspector has a very important responsibility and difficult task in monitoring the masonry construction. The main objectives are to check that the following are being done properly:

The masonry bond pattern is as shown on the drawings.

- There are two types of masonry bond patterns: running (or common) and stack. In running bond, the vertical joints are staggered in succeeding layers so that joints are centered over the units below them. In stack bond, all the joints line up. The former creates a stronger element because it eliminates a vertical plane of weakness. Stack bond is often used for architectural reasons, or when cells are not symmetric within the unit. When the engineer specifies one type of bond over another it is to achieve a specific element strength. Confirm with the contractor before work begins what bond pattern is specified.

The units, mortar and grout are placed correctly.

- The units need to be clean and free of flaky material before they are mortared or set. They must be placed flush with each other unless otherwise called out on the drawings so that the element is not unstable and so that grout can flow freely to the bottom. The contractor should use level and plumb lines to ensure that the units are being placed properly. Every couple of courses plumbness of the wall should be checked with a level. Look down from the top to make sure that there is space for the grout to flow. Check that the mortar hasn't squeezed into the voids of the unit to such an extent that the grout cannot flow freely. The mortar should be beveled away from the inside face of the units when troweled.
- "Racking" or "toothing" may be necessary if door or window frames have not been installed. "Racking" is the process of temporarily stepping back a wall until the frame can be installed. "Toothing" maintains a vertical wall surface but leaves a half unit gap at alternate courses. Figure C2-3 shows examples of "toothing" and "racking." Check with the engineer or architect before toothing is allowed. If it is, the top and bottom bed joints must be

carefully compacted to ensure a full and tightly compressed joint. Rebar also must be placed carefully into toother joints to ensure that proper coverage is maintained.

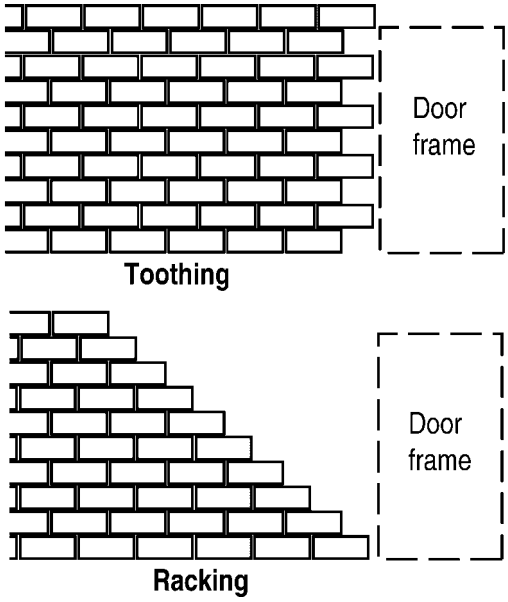

Figure C2-3 Toothing and racking

- Check that corners and intersections are laid properly. Figure C2-4 shows examples of layup patterns.
- For grouting:
  - Check that grouting does not begin until mortar has set sufficiently to withstand adequately the pressure of the grout head.
  - The grout must be poured in lifts no higher than specified on the drawings, and all the specified cells completely filled. Confirm the lift heights with the contractor before construction begins.
  - Check that grout slump is between 8” and 10” for proper fluidity.
  - Check that the lift heights are as called out in the specifications and do not exceed UBC Table 21-C requirements.
  - When grout is cast in lifts, a lift must end 1-1/2 inches below the top of a unit, except at the top of a wall where it shall end ½” below the top if there is a bond beam.
  - If grouting over five feet in height (high lift grouting) make sure that cleanouts are provided at 32” spacing and at all reinforcing, and are maintained.
  - Check that all grout lifts over 12” are vibrated and smaller lifts are puddled. Vibrate high lift grout in no more than six-foot increments.
  - If cells are to be voided, check that an appropriate stop material has been placed to prevent grout flowing into these cells.
  - Do not allow aluminum pipes to be used for pumping grout.

The mortar joints are of the right thickness and shape.

- Check mortar thickness regularly. The initial bed joint needs to be between ¼ and 1-inch thick and subsequent bed joints ¼ to 5/8-inches thick. The depth of the bed joints shall be the face shell thickness of the units or the complete depth of solid units.
- The shape of the exposed joint needs to be appropriate for weather resistance and for architectural appearance. Figure C2-5 indicates various types of joints.

The reinforcing is placed correctly (See Figure C2-6).

- Check that the foundation dowels are straight, in the right locations, and without rust, nicks or bends. Also confirm that they have been pull tested as called out in the specifications. Do not permit pounding of the dowels into the correct location. Bending may be permitted if on a 1-to-6 slope and allowed by the engineer. This should be checked well in advance of the layup to permit the contractor to epoxy new dowels if necessary.

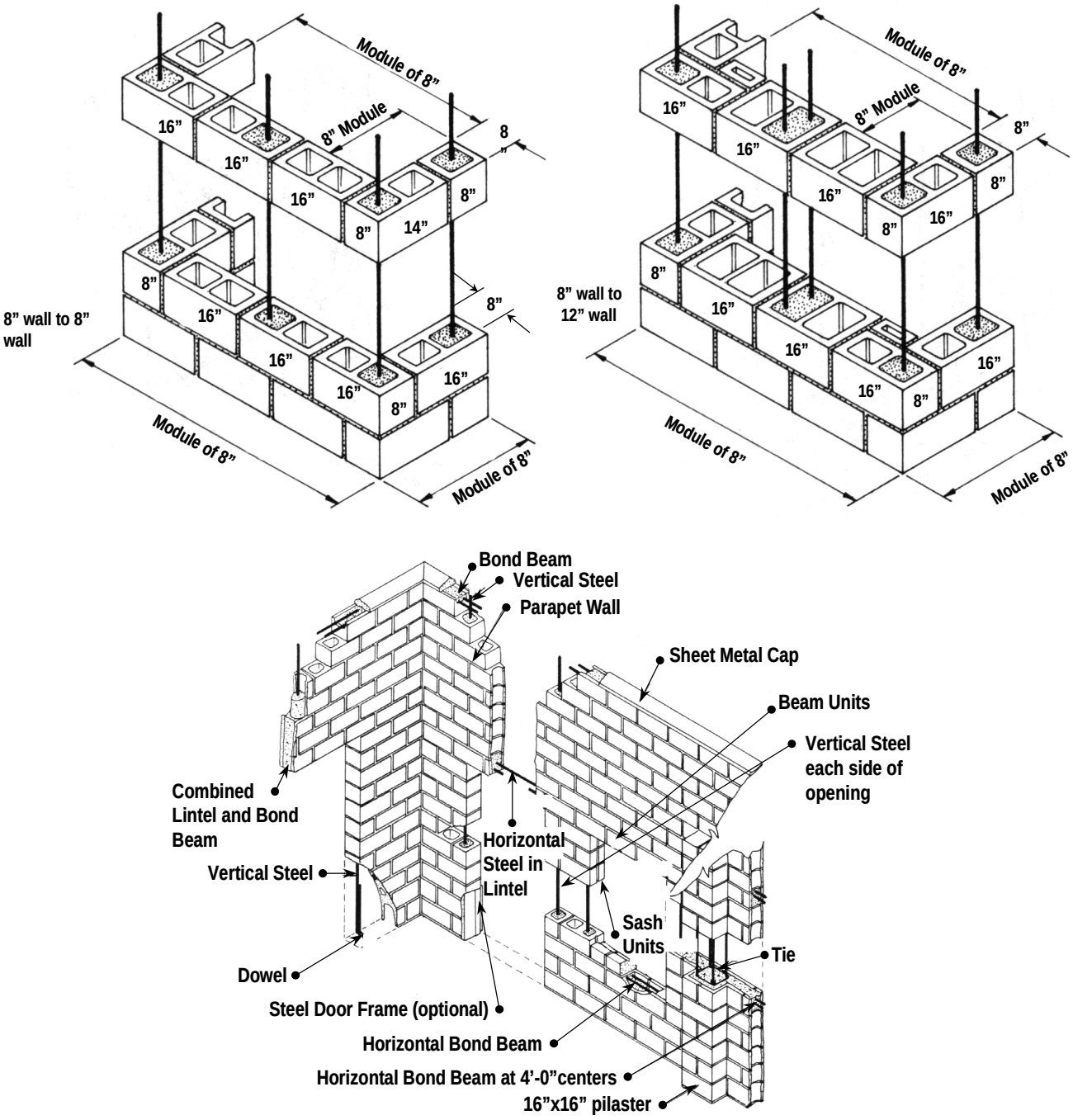

Figure C2-4 Wall layup patterns

- Check that the size and location of the horizontal and vertical rebar is as called out. Watch that adequate cover is being maintained and that free flow of the grout is permitted. Check that bar spacing is adequate to obtain proper cover. Tolerance of vertical bars with respect to the ends of the units is +/- 2”, and to the face of the units is:
  - ½” for 8” units or thinner
  - 1 inch for 8”-24” units
  - 1-1/4” for units greater than 24”

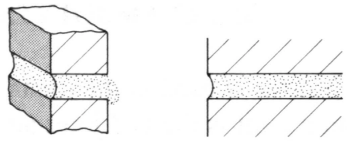

Concave joint: Most common joint used, tooling works the mortar tight into the joint to produce a good weather joint. Pattern is emphasized and small irregularities in laying are concealed.

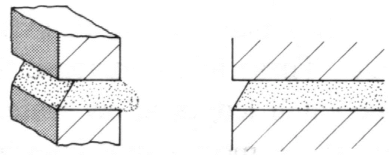

Weather Join: Use to emphasize horizontal joints. Acceptable weather joint with proper tooling.

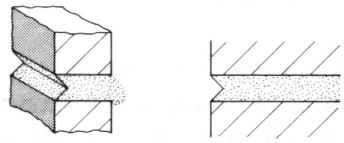

"V" joint: Tooling works the mortar tight and provides a good weather joint. Used to emphasize joints and conceal small irregularities in laying and prove a line in center of mortar joint.

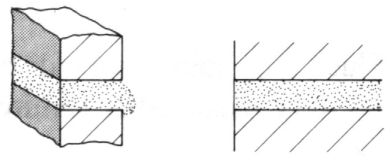

Flush Join: Use where wall is to be plastered or where it is desired to hide joints under paint. Special care is required to make joint weatherproof. Mortar joints must be compressed to assure intimate contact with the block.

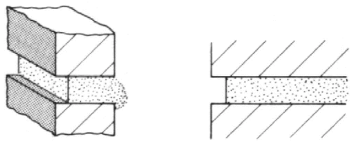

Racked joint: Strongly emphasizes joints. Poor weather joint - Not recommended if exposed to weather unless tooled at bottom of mortar joint.

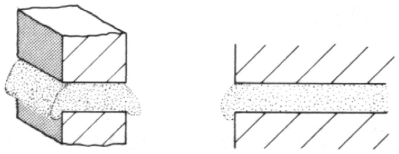

Squeeze joint: Provides rustic, high texture look. Satisfactory indoors and exterior fences. Not recommended for exterior building walls.

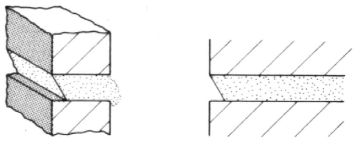

Struck Joint: Use to emphasize horizontal joints. Poor weather joint. Not recommended as water will penetrate on lower ledge.

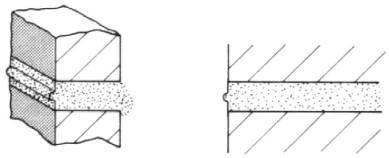

Beaded joint: Special effect, poor exterior weather joint because of exposed ledge - not recommended.

Figure C2-5 Various joint types

- Check that the bars are properly anchored and supported with positioners, cradles or ties to prevent movement when the grout is placed. As a rule of thumb, check that bars are secured no farther apart than 2 x db feet + db inches, where db is the bar designation (i.e., #6 bars should be secured no farther apart than 2 x 6 feet + 6 inches or 12'-6").
- Check that mortar joint wire has adequate cover. Mortar thickness needs to be 2 x the wire diameter.
- Check that hooks and bends in rebar comply with the drawings and that adequate cover is maintained.

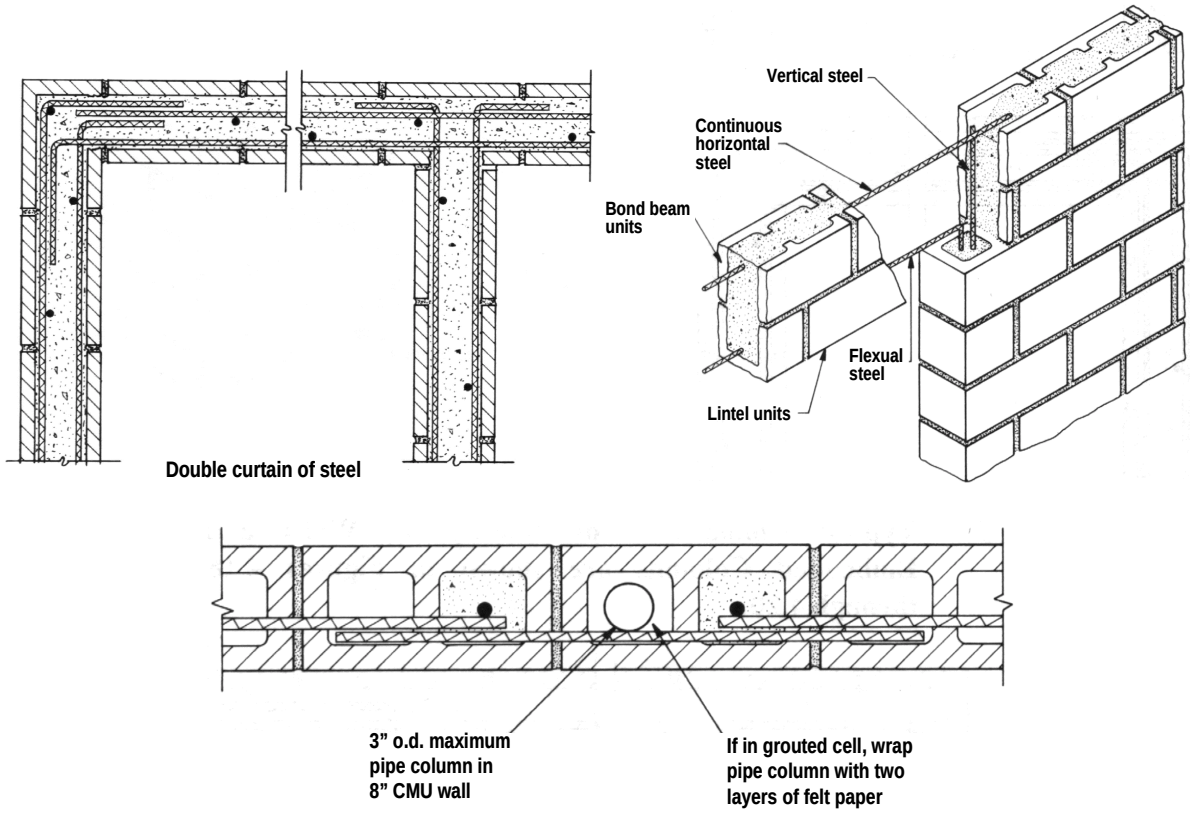

Figure C2-6 Typical connections of intersecting walls and embedded columns

- Check that splices and laps are properly tied off and positioned before the masonry is laid up. This is especially important in low-lift grouting, where the vertical bars are commonly spliced in short lengths. Care should be taken that this is done properly and that the splicing does not get too congested.

The overall construction remains within allowable tolerances.

- Figures C2-7 through C2-13 show the tolerances permitted in masonry layup. Check on a regular basis that the construction does not exceed these tolerances. Use a level, line, ruler and plumb bob to check tolerances.

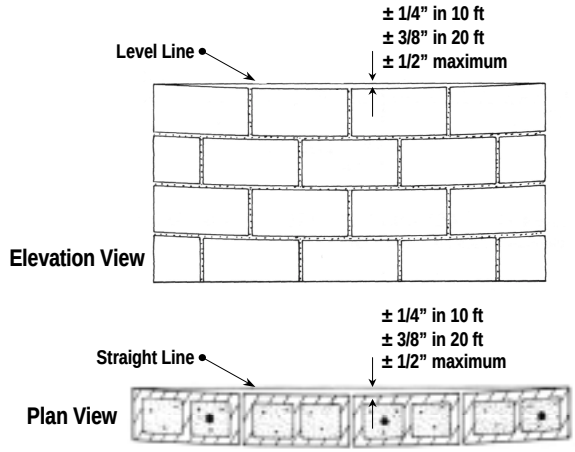

Figure C2-7 Permissible variation from true to line

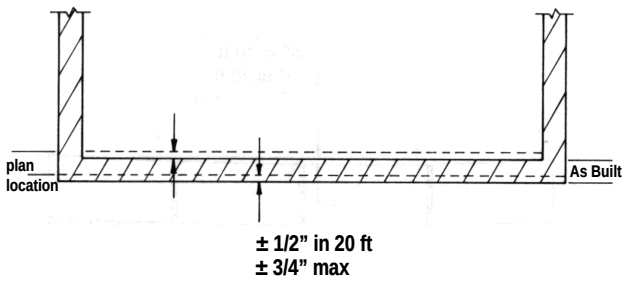

Figure C2-8 Permissible variation of element in the plan

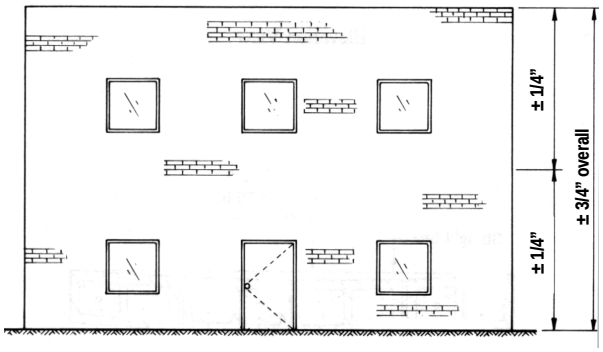

Figure C2-9 Permissible variation of element in the elevation

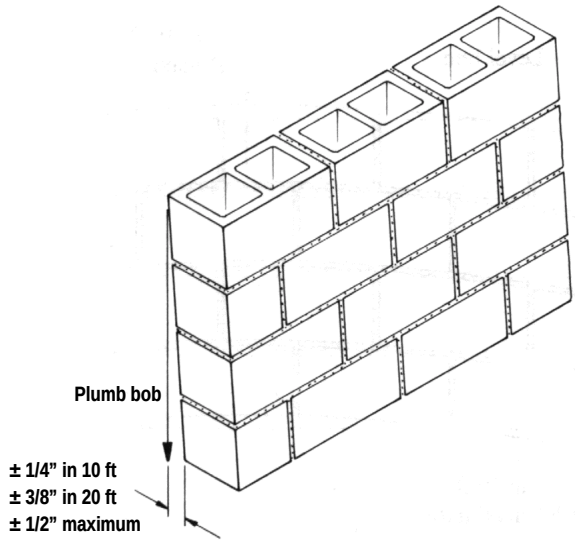

Figure C2-10 Permissible variation from plumb

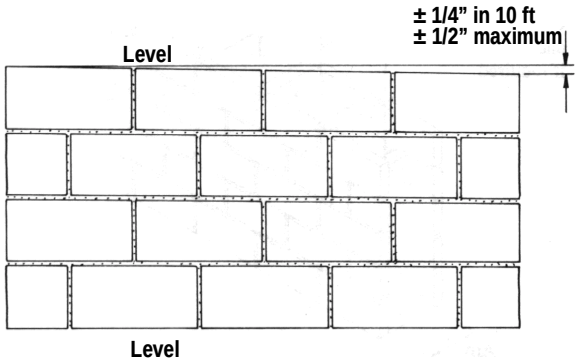

Figure C2-11 Permissible variation from level, top surface of bearing walls

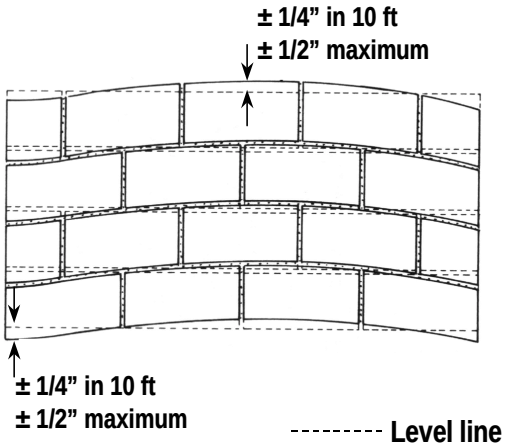

Figure C2-12 Permissible variation from level for head joints

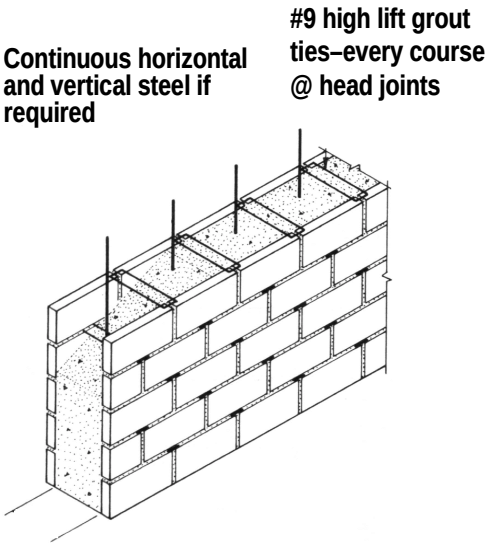

Figure C2-13 Permissible variation of grout space

C. Job Aids

The two Job Aids included with this curriculum (Designer Checklist for Masonry Construction, and Inspection Checklist for Masonry Construction,) can help identify important issues during design and in the inspection process.

2.1.3 References and Resources

ACI, 1992, *Building Code Requirements for Masonry Structures*, ACI 530-92, American Concrete Institute.

ASTM, various standards and years, American Society for Testing and Materials, Philadelphia, Pennsylvania:

A82 – Cold-drawn steel wire for concrete reinforcement

A615 – Reinforcing bars for concrete

C55 – Concrete building brick

C90 – Hollow load-bearing concrete masonry units

C91 – Masonry cement

C144 – Aggregate for masonry mortar

C150 – Portland cement

C207 – Hydrated lime for masonry purposes

C270 – Mortar for unit masonry

C404 – Aggregate for grout

C476 – Grout for masonry

C652 – Hollow Brick (Hollow Masonry Units Made From Clay or Shale)

C1019 – Sampling and testing grout

CMACN, 1987, *Reinforced Concrete Masonry Inspectors Manual*, Concrete Masonry Association of California and Nevada.

ICBO, 1997, *Uniform Building Code*, Chapter 21 – Masonry, International Conference of Building Officials, Whittier, California..

ICBO, 1997, "Uniform Building Code Standard 21-1: Building Brick, Facing Brick and Hollow Brick (made from Clay or Shale)," *Uniform Building Code, Volume 3, Material Testing and Installation Stantards,* International Conference of Building Officials, Whittier, California..

ICBO, 1997, "Uniform Building Code Standard 21-4: Hollow and Solid Load-Bearing Concrete Masonry Units," *Uniform Building Code, Volume 3, Material Testing and Installation Stantards*, International Conference of Building Officials, Whittier, California..

MIA, 1995, *Reinforced Concrete Masonry Construction, Inspector's Handbook*, Third Edition, Masonry Institute of America.

R.C. Smith, 1979, *Masonry: Materials, Design and Construction*.

WSCPA, 1995, *Notes on the Selection, Design and Construction of Reinforced Hollow Clay Masonry*, Western States Clay Products Association

SEAONC, 1998, *Guidelines for Special Inspection and Structural Observation in Accordance with the 1997 UBC*, Structural Engineers Association of Northern California.

2.2 Reinforced Concrete Construction

2.2.1 Concrete Materials

Issues and Concerns. Correctly specifying, reviewing and preparing the materials that make up reinforced concrete are the most basic issues for maintaining quality assurance and control. These materials include cement, sand, coarse aggregates, water and admixtures.

A. Discussion and Examples

Concrete is a mixture of five elements: cement, water, coarse aggregate, fine aggregate (usually sand) and admixtures. Specification of each of these elements in the proper ratio is essential to achieving a mix that meets the engineer's requirements. Improper mix proportioning, batching or mixing can lead to poor performance.

Cement is a gray powder that reacts with water to form a bonding agent. It:

- Acts as a glue to hold the aggregate together.
- Increases the strength of the mix.
- Decreases the mix slump.
- Decreases the time that the mix stays plastic, or workable.
- Is used as an architectural element if colored or pigmented.

Water is the catalyst that initiates the bonding process of the cement. It:

- Starts the chemical reaction within the cement.
- Decreases the strength of the mix.
- Increases the slump.
- Increases both the working time of the mix and the curing time.
- Increases shrinkage in the cured concrete.

Coarse aggregate is typically 3/8" to 1" rock that gives strength to the mix. It:

- Is bonded to other coarse aggregate and to fine aggregate by the cement.
- Adds strength to the mix if the aggregate is a hard material such as granite.
- Affects the workability of the concrete depending on the aggregate size.
- Affects the ability to pump the mix, depending on the aggregate size.
- Is used as an architectural element if exposed.

Fine aggregate is usually sand. It:

- Is bonded to the coarse aggregate by the cement.
- Fills in the spaces between the coarse aggregate to eliminate voids.

There are a variety of admixtures, each of which has a different purpose. They can:

- Increase the mix strength.
- Increase or decrease workability, curing time and slump.
- Protect the cured concrete against freezing and thawing damage.
- Control cracking.

Improper selection of these elements can alter the behavior of all of these properties in undesirable ways. A change in one component of a submittal may require that the entire mix be modified. An engineer, plan checker or inspector should not permit any modification to the mix unless the new proportions have been reviewed entirely.

Improper material storage in the batching plant can cause deterioration and reduce the performance of a mix. Dirty facilities may result in impurities being introduced into the mix, also reducing performance. Without following proper procedures for storing and monitoring materials, the contractor may incur costly delays replacing the material or may use material that has been compromised.

Concrete mixing is typically done in a batch plant. The material is then loaded into trucks and sent to the site where it is used immediately. It is important that proper inspection be performed at the plant to make sure that the proportions are correct and that the material is of the right type and is clean. At the site, the inspector needs to check that the material is placed within a specified time, and that it is not contaminated.

The process of mixing concrete, bringing it to the site and placing it is a relatively quick one. Communication between the contractor, inspector and engineer is vital to avoid ruined or improperly placed material. Once concrete is placed, removing it is extremely difficult and costly.

The contractor and owner may each hire inspection services to ensure that the work is done properly. Close coordination between these two entities is important.

B. Resolution of Issues Related to Concrete Materials

For the designer:

Material specification

The engineer should meet with the architect as early as possible to specify the type of cement, aggregate and admixtures to be used throughout the project. Consider:

- The size and properties of the coarse aggregate
- The color or other properties of the cement
- Admixtures to modify the color and surface appearance of the concrete

Initially, the engineer should design a concrete mix to have a specified strength. This will drive the type of aggregate and the proportions of the mix. Early in the project, the architect and engineer should choose materials that meet both the structural and architectural project needs. The engineer then needs to adjust the mix to meet other requirements for workability, flowability, shrinkage, and curing time. Typically the engineer does not actually design the mix or specify the exact ratios of the five components. The engineer places limits on the types and amounts of materials that can be used. The batching plant will design the actual mix proportions.

When preparing concrete mix specifications the engineer should review the drawings carefully and consider:

- The strength of the concrete in all portions of the project
- Locations where high slump is required due to congestion
- Locations where pumping will be required
- Types of temperature effects on exposed concrete surfaces
- Locations where the concrete must be especially plastic and workable

When specifying acceptance criteria, here are some tips:

- Evaluate whether or not it is necessary to conduct pre-qualification tests of the materials to be used in the project.
- Require that approval of mix designs be based on reliable criteria such as contained in ACI 301.
- Evaluate the need for batch plant certification.
- Establish the intervals and conditions for sampling and testing of concrete.
- Include reporting requirements and recertification requirements.
- Establish inspection procedures for batch plants.
- Establish acceptable strength requirements of concrete at various stages of curing.

Allow substitutions to the materials only if approved by the engineer and if they meet all the design requirements. Create a process for making and reviewing

substitutions, including notification of inspectors.

Add the requirements for storing materials on site, and for field testing to the specifications.

Meetings

After the contractor is selected for the project, a pre-construction meeting should be held with the owner, engineer, architect, inspectors and contractor. The purpose of the meeting should be to establish lines of communication and to review the process contained in the specifications for making and reviewing substitutions or addressing field conditions that differ from the drawings or specifications. It is important that all parties agree to the process before construction starts, so problems are resolved without blame or unnecessary delays. At this time, the engineer should confer with the contractor to see if there are any details or special circumstances that require a change in the mix design. It is best to resolve these issues before construction starts.

Quality assurance

It should be within the engineer's scope of work to provide assistance in the inspection process throughout the project. This will involve time to meet with the contractor and inspector on a regular basis to discuss progress and upcoming tasks, and to review past procedures with the intent of learning from any mistakes. Specifically, the engineer should plan on:

- Analyzing all general and special quality objectives defined by the owner or architect
- Analyzing all regulatory requirements set forth by the owner and regulatory agencies
- Establishing acceptance criteria for the materials
- Preparing contract documents that include the design of concrete mixes
- Preparing, coordinating, evaluating and reporting all aspects of the quality assurance program as required by the owner
- Recommending or participating in the selection of the contractors, suppliers, materials testing laboratories and field inspectors as required by the owner. The engineer should check that the inspectors are ACI qualified and read the latest review of the labs made by the Cement Concrete Reference Laboratory, or the Materials Reference Laboratories. It is important that the labs are accredited in accordance with ASTM C 1077
- Administering Quality Assurance (QA) program for ensuring that quality is maintained
- Accepting or rejecting workmanship and material
- Evaluating test and inspection data, including submittals
- Reviewing the QA programs and the quality of the work of the contractors, suppliers, testing labs and inspectors throughout the project.

For the plan checker:

The plan check engineer should confirm that the design engineer's specifications for concrete meet the requirements of building codes and standards.

Use charts and tables from *the Uniform Building Code* and Standards, the American Concrete Institute and from ASTM to help check mix designs. Refer, as necessary, to:

- UBC Tables 19-A (for mix design, especially in cold-weather climates).
- ACI 301 – Specifications for Structural Concrete for Buildings.
- ASTM C94 – Standard Specification for Ready-Mix Concrete.
- ASTM C150 – Standard Specification for Portland Cement.

For the field inspector:

The main responsibility of the field inspector is to check that the right material is delivered to the site and that it is prepared properly for placement. The scope of inspection services for moderately complex projects should include:

- Sampling and testing of concrete materials prior to construction and at established intervals during construction
- Use of proven materials and material test reports accepted for some required tests
- Approval of concrete mixes based on ACI 301 and ACI 318
- Inspection of batch plant storage, production facilities and delivery trucks prior to construction
- Random inspection of batching operation during construction with checks for yield
- Pre-placement, placement and post-placement inspection of concrete activities (including curing) in accordance with industry standards and the contract specifications. Special attention should be paid to mass concrete, hot weather concreting, and cold weather concreting
- Sampling and testing of concrete in the field at established intervals by independent testing laboratories or other qualified personnel acting as agents for the owner
- Monitoring maturity of concrete prior to form removal or monitoring of other activities such as post-tensioning, by means of a field-cured cylinder test program or a nondestructive testing program
- Coordinating laboratory tests of concrete cylinders for acceptance of concrete strength
- Providing the owner and engineer with timely reports for all testing and inspection performed
- Interpreting the results of inspections and tests to determine specification compliance and provide appropriate recommendations to the owner and engineer
- Performing audit and inspection of manufacturer's QA/QC (Quality Control) program to assure compliance with ACI 121R.

Before any material arrives on site, the inspector should verify that:

- The engineer's mix specifications have been properly called out by the contractor
- Batch inspections have been performed according to the specifications
- All necessary material testing has been performed as required.

Keep a daily log of:

- Date of inspection
- Area or system inspected
- Item inspected
- Inspection results
- Acceptance criteria
- Statement of compliance or noncompliance
- Remarks
- Inspector's signature and company affiliation
- Weather, temperature and project conditions.

C. Field Inspection

The inspector should bring to the site:

- A current set of plans and specifications, including change orders. If possible obtain a half size or reduced set of drawings that are easily portable.
- Applicable codes and standards to which the project was designed and the requirements of the jurisdiction it is under.

- A list of phone and fax numbers and addresses of architects, engineers and other responsible persons.
- A notebook or log to keep daily notes.
- Necessary forms for filing reports with required agencies.
- Pens, pencils, marking crayon, other markers and erasers.
- A folding rule or retractable tape and a long steel tape.
- Molds to make slump tests.
- A small trowel and smooth rod for making and rodding concrete samples.
- Samples molds from testing laboratories.
- A watch.

2.2.2 Cast-in-Place Concrete Placement

Issues and Concerns. The placement of reinforced concrete is a critical issue for maintaining quality assurance and control. The placement process consists of three phases: pre-placement, placement and post-placement, each of which requires inspection and review by the field inspector and engineer.

A. Discussion and Examples

The actual process of placing concrete is a relatively rapid one. Once the concrete arrives on site, it must be placed within a short time, or it sets and becomes useless. There is usually little opportunity to modify rebar locations or formwork once the concrete is on its way. Therefore, it is critical that the site be fully prepared to accept the concrete once it leaves the batch plant. Likewise, during the placement of concrete, procedures for delivering it to the right place, vibrating or otherwise consolidating it and taking samples for testing must be established well in advance. After a pour is completed, it is equally important to monitor and establish procedures for finishing and curing the concrete, for removing formwork and shoring and for performing tests on samples. If any of these tasks is not performed properly, the concrete may not perform as desired, which could lead to costly mitigation or replacement efforts.

B. Resolution of Issues Related to Cast-in-Place Concrete Placement

Pre-placement inspection

Prior to placing the concrete, proper inspection and quality assurance needs to be made for:

- Lines and grades
- Forms
- Reinforcing steel
- Prestressing steel
- Embedments
- Blockouts

Typically, lines, grades and forms are the responsibility of the contractor. These are usually means and methods issues that are not designed or detailed by the engineer. In the specifications, however, the engineer should specify tolerances of these items, such as the amount that formwork is allowed to be out of plumb, square or level, or the accuracy within which measurements need to be taken. The engineer should pay attention to the sequence of concrete placement, to avoid designing elements that will result in forms being inaccessible or that cannot be released once the concrete has set. The engineer should also check with the architect to identify any special treatment of the forms such as chamfer, highlighting strips, or form texture. Inspection of these items is the inspector and contractor's responsibility. The engineer also needs to identify on the drawings or in the specifications, the location and details of construction, control and expansion joints.

Specifying reinforcing and prestressing steel is the engineer's responsibility. The size, grade, location, welding, protection and

stability of the steel should all be called out in the drawings or specifications. The engineer is not responsible for the contractor's ability to lay the rebar or to place the concrete. However, it is expected that the engineer will consider issues of constructability so that the design can be built. With respect to rebar, this should include the ability to access far curtains of steel for purposes of securing and tying it, and avoiding congestion that will prevent the concrete from flowing properly. Congestion can occur if longitudinal or transverse steel is spaced too closely, if lap splices occur in a crowded area, or if hooks create voids that are to small to allow the concrete to pass.

The inspector is responsible for ensuring that the proper material is used and that it is placed according to the drawings. The inspector should also note and make the engineer aware of areas that may present difficulties when placing the concrete.

Embedments and blockouts represent items that are often required to attach elements to a concrete surface, or to pass pipes, ducts, and conduit. Embedments, such as anchor bolts or structural plates are usually the responsibility of the engineer to call out, when they support structural components such as beams and columns. The engineer needs to show clearly on the drawings where these elements are and how they are to be installed. References to typical details must be comprehensive.

The responsibility for noting other embedments, such as those to hold mechanical or architectural components, or embedded conduits and pipes, are typically not the structural engineer's. These notes and details should be shown on the mechanical or architectural drawings.

It is very important, however, that the engineer and architect meet early in the project to clarify these responsibilities, and to coordinate the placement of embedments so that they don't interfere with the reinforcing steel. With blockouts and embedded conduit, this becomes even more important. The engineer must make clear the limitations that can be allowed on the size and location of blockouts or embedments. Often the engineer will develop typical details for reinforcing around blockouts and specifications for the maximum size of embedded conduit. These need to be conveyed to the architect and mechanical engineers, to avoid blockouts being placed in structurally undesirable locations. During construction, the engineer should observe the placement of embedments and blockouts to make sure that they do not interfere with the buildings' structural performance.

The inspector should make a more thorough review of embedment lengths and conformance to the drawings, and of blockout placement and trim steel.

Once the forms, steel, embedments and blockouts are in place, adequate time must be allowed for the engineer and inspector to make site inspections to confirm that the construction conforms to the plans and specifications. Before the project begins, the engineer, architect and contractor need to agree upon a schedule for reviews that does not unnecessarily delay the project, yet allows the design professionals enough time for a proper review. Procedures should be established for the inspector or engineer to notify the engineer or architect of elements that are not in conformance, and for these problems to be rectified.

Placement inspection

When the concrete is ready to be placed, the field inspector has the responsibility of observing:

- Conditions
- Field tests of concrete
- Conveyance of concrete
- Placement and consolidation of concrete.

Special inspection is required by the code for certain parts of the construction

sequence. The engineer should develop a special inspection and testing schedule, summarizing the inspection requirements in sufficient detail to direct the inspectors in the field. This should occur within the general notes or project specifications. Special inspection is required at a minimum during:

- The taking of concrete specimens
- Installation of embedded bolts
- Concrete placement in special moment resisting concrete frames
- During placing of reinforcing steel and stressing of prestressing steel tendons
- During the construction of cast-in-place drilled piers or caissons
- Anchoring to existing concrete or masonry.

Checking conditions requires that all aspects that assist the placement of the concrete are in place at the time of the pour. These will include coordinating the delivery of the concrete, checking that power and lighting are adequate and that weather conditions are conducive for the concrete to be placed.

As the concrete is being placed, or just before, the inspector needs to take all required field tests. This includes testing slump, taking cylinders, recording ambient conditions, checking that the water and air are added according to the specifications, and that the material is used within the specified time limit or number of truck drum revolutions.

When the concrete is conveyed from the truck to the point of application, the inspector needs to confirm that it is conveyed in hoses, hoppers, or other means that do not chemically react undesirably with the concrete. The material should not be contaminated along the way and it must not be allowed to segregate into its components. This often occurs if the concrete is dropped from a large height without a hose, drop chute or funnel. The engineer's specifications should call out the maximum height for dropping concrete.

Inspecting the placement and consolidation of the concrete requires that the conveying equipment be able to access all areas of the placement. Segregation of materials should be checked again. The concrete should not be placed in lifts higher than specified. It must be properly vibrated so that the material consolidates and flows properly around embedments and against forms and blockouts. The inspector should also check that bleed water and temporary ties and spacers are removed. The inspector should check all construction, control and expansion joints, for cleanliness, proper preparation and the correct placement of filler material.

Post-placement inspection

After the concrete is placed, the field inspector needs to check:

- Finishing and curing
- Form work and shoring removal
- Reshoring and reshore removal
- Tests of hardened concrete.

Immediately following the placement of the concrete, it must be finished and prepared for curing. The finish for each concrete element is usually specified by the architect. The inspector should have a copy of the finish schedule with which to check each element. The engineer's specifications typically call out the procedure for curing the concrete so that it does not crack or dry too rapidly. The inspector should check that covering, wetting or the application of chemical curing agents is done properly and make regular visits to the site to check that the curing process is being maintained.

Form and shore removal is usually done when the concrete reaches a minimum safe compressive strength as specified by the engineer. Often the engineer will specify either a minimum time or strength. In many cases the actual strength will exceed the minimum before the minimum time limit.

The inspector's laboratory needs to test the concrete specimens to confirm that the strength requirement is met, before the forms can be removed. Following form removal, the inspector should confirm that patching or repair of the formed surfaces is done properly.

Reshoring

Reshoring may be necessary to support formed elements in a manner that allows construction to continue. Typically the contractor hires its own engineer to design shoring and reshoring. This design may or may not be checked with the engineer of record to confirm that elements supporting shoring or reshoring are strong enough. As with form and shore removal, reshoring must be left in place until the concrete has reached a specified minimum strength. It also needs to be removed in a sequence that ensures all elements are properly supported. The contractor should have a shoring and reshoring removal sequence in place before the work begins. The inspector should make sure this sequence is followed.

The concrete test specimens that were taken need to be stored and tested at appropriate times. Curing of the specimens and proper storage should be called out in the engineer's specifications or according to ASTM. The engineer should also call out the types and number of tests needed. The inspector is responsible to make sure these tests are taken at the right time and that the information is recorded and reported to the engineer for evaluation.

C. Field Inspection

The engineer and inspector should bring to the site:

- A current set of plans and specifications, including change orders. If possible obtain a half size or reduced set of drawings that are easily portable.
- Applicable codes and standards to which the project was designed and the requirements of the jurisdiction it is under.
- A list of phone and fax numbers and addresses of architects, engineers and other responsible persons.
- A notebook or log to keep daily notes.
- Necessary forms for filing reports with required agencies.
- Pens, pencils, marker crayon, other markers and erasers.
- A folding rule or retractable tape and a long steel tape.
- Molds to make slump tests.
- A small trowel and smooth rod for making and rodding concrete samples.
- Samples molds from testing laboratories.
- A watch.

2.2.3 Shotcrete

Issues and Concerns. Shotcrete, or gun-applied concrete, or gunite, are terms used to describe the method of projecting wet concrete against a vertical surface using forced air and a hose. Correctly specifying the properties of the material, the layout of reinforcing steel within the element and the proper application of the shotcrete are essential for obtaining high-quality construction.

A. Discussion and Examples:

Properties

Shotcrete, like cast-in-place concrete, is a mixture of five elements: cement, water, fine aggregate (usually sand), coarse aggregate and admixtures. Specification of each of these elements in the proper ratio is essential to achieving a mix that meets the engineer's requirements and can be applied properly.

Unlike cast-in-place concrete, the mix proportions for shotcrete require that the water content be kept low enough to obtain a minimum slump that doesn't cause

sagging during application. The only form is on the backside of the element, against which the shotcrete is placed. Therefore there is no mechanism to hold the material in place as it cures.

Since the material is delivered through a hose, the size of the aggregate must be small enough to pass. Pea gravel is typically used in shotcrete application. As long as these two components of the mix are controlled, the other elements can typically be proportioned in the same way as cast-in-place concrete. The controls on batch plant inspection, proper storage of materials and delivery to the site are similar to cast-in-place concrete.

Reinforcing Steel

With cast-in-place concrete, avoiding void spaces within formwork requires that the placement of reinforcing steel not be too congested for the concrete to flow. With shotcrete, this issue is much more important. Shotcrete relies on the pressure of the application to force it into the void spaces between rebar. Gravity does not typically help in this regard because sagging is to be avoided. Vibrating shotcrete is not permitted because it causes the material to sag and shed from the form. Therefore, it is crucial that the reinforcing steel be separated widely enough that the material fills the spaces. For this reason, shotcrete is not often used for the construction of beams, columns, wall boundary elements or other locations where the rebar spacing is tight. It must also be used with caution in wall applications where there are two curtains of reinforcing steel. The front curtain may act as a shield, deflecting the material from reaching the curtain behind, creating a void. Additionally, in two-curtain applications, the reinforcing steel is usually placed with about ¾" to 1-½ " cover, whereas in single curtain applications, the reinforcing is usually in the center of the wall. The back curtain often prevents the shotcrete from getting behind the steel and creating the cover.

- It is usually best to limit applications to single curtain walls, or walls where the curtains are staggered and the rebar is spaced at 14-18 inches.
- Also, limiting the size of the reinforcing to #5 or smaller bars increases the likelihood of obtaining full encasement.
- When splicing rebar, noncontact splices should be used, with the clear spacing equal to three times the bar diameter.
- The reinforcing steel needs to be securely anchored to prevent movement during the shotcrete application.
- Where the above is not possible, performance testing of the nozzlemen should be made, as described in the Resolution section.

Application

The two most important factors in the proper application of shotcrete are bond and encasement. Bond is the ability of the shotcrete to adhere to the applied surface, if it is a cast-in-place element or stone or masonry. Although bonding to these materials is often supplemented with embedded dowels, a poor bond can lead to inferior performance. Shotcrete, when applied to another substrate, is usually thin, 4-8 inches. It is often applied in this manner to strengthen an existing element. If it does not bond, it may not act compositely with the substrate and may buckle under large vertical or lateral loads. It is best to roughen the substrate or even place reveals to help the shotcrete adhere. All loose, flaky or greasy materials need to be removed from the substrate prior to applying the shotcrete. The substrate should also be surface saturated prior to application. The reason for this is that a dry surface will suck water from the shotcrete into the substrate, causing the shotcrete to cure improperly. Shotcrete can also be applied to steel. Steel elements should be prepared in compliance with the standard SSPC-SP6 section 3.3.3.2.

It is desirable to avoid a strong bond when shooting against a temporary form. The use of form release agents, however, can be

troublesome. The force of the applied shotcrete can remove the agent, causing it to mix with the shotcrete, reducing its strength or reducing its ability to bond with itself in subsequent layers. These compounds must be used with caution.

Shotcrete is applied in lifts or layers. Because there is no front form, the head that is developed at the bottom of the layer limits the height of material that can be placed at one time. Typically this is from 18" to three feet depending on the mix and conditions. The horizontal surface must be left or prepared in a manner that will create a good bond with the succeeding layers. The surface should be rough, and, except for cases where the element is load bearing, placed on a 1 to 1 slope. The surface should be cleaned of loose material before the succeeding layer is placed.

Encasement is the ability of the shotcrete to surround fully the reinforcing steel and fill the spaces between the rebar. Obtaining proper encasement is a challenging task. Difficulties often include rebar congestion, positioning of the nozzle, rebound and trapped air.

Rebar congestion as described above can shield the areas behind the bars, creating voids. Where possible the nozzle should be placed in a manner to get behind the rebar. If the rebar is very congested, the engineer should require a test panel to be prepared, as described in the Resolution section. This panel can then be cut apart to check for voids. The shotcrete should be applied with the correct amount of velocity and plasticity to flow around and behind the rebar. The face of the rebar should remain clean during encasement and should be cleaned if subsequent vertical layers are to be added.

Positioning of the nozzle can be difficult in tight locations. Platforms should be constructed for the nozzleman so that the application area can be easily and completely reached without obstructions. The nozzleman should not have to stretch to reach a location or shoot into a hidden area. The nozzle should be held perpendicular to the wall surface, and at a 45° angle at corners.

Rebound, or overspray, always occurs with shotcrete. It results when pieces of material do not adhere and either bounce back away from the wall or remain embedded in the wall. Often this material does not adhere because it was poorly consolidated. If rebound remains in the wall, it may form pockets or voids and reduce the shotcrete's effectiveness. Rebound has a tendency to get trapped in corners, recesses and other light locations. For this reason, these locations should be shot first. All rebound must be removed, including overspray that has adhered to reinforcing steel, before succeeding layers can be placed. Rebound and overspray cannot be reused.

Trapped air can occur if there is no method for it to escape. When shooting the material, it is important to leave paths for air to escape.

Other issues to note when placing shotcrete are:

- Ambient temperature. The ambient temperature when applying shotcrete should be above 40 F and rising. For wet-mix application (where the shotcrete is mixed with water before entering the hose) the maximum ambient temperature, including the reinforcing and substrate, should be 90 degrees F and for dry-mix application (where most of the water is added at the nozzle) it should be no hotter than 100 F.
- *Alignment control.* Taught wires and other means should be employed to establish material thickness and levels.
- *Finishing*. The exposed surface of the shotcrete should be gun, broom or otherwise finished according to the specifications. At construction joints, the finish should be broom finished or roughened where subsequent layers are to be placed.

- *Curing*. The shotcrete should be cured by continually maintaining a moist condition for seven days or until the specified strength is achieved. Ponding, sprinkling, covering with wet or impervious material, and curing compounds are all acceptable methods of curing as is natural curing where the ambient humidity is over 95%.

B. Resolution of Issues Related to Shortcrete

For the engineer:

Material specification

The engineer should meet with the architect as early as possible to specify the type of finish to be used throughout the project. Initially, design the mix to have a specified strength. Then, adjust the mix to meet other requirements for workability, flowability, shrinkage, and curing time. See the chapter on Concrete Materials for further information on materials specifications.

Submittals

Request submittals that describe the mix characteristics and the preconstruction test panel results. Also request a daily log from the inspector regarding the placement of the shotcrete.

Placement procedures

Specifications should clearly call out that the nozzleman and the subcontractor performing the work have been certified in shotcrete work for at least five years. All nozzlemen who will be working on the job should be certified and the subcontractor should have backups with certifications ready if the primary nozzleman is out.

Testing

Require preconstruction testing. Preconstruction test panels should be prepared for examination by the architect and engineer with sufficient time before actual placement to allow for modifications. Panels should be produced for:

- Each proposed mix design,
- Each anticipated shooting orientation
- Each proposed nozzleman.
- The various rebar configurations to be used on the job. If the reinforcing steel layout is not overly congested, the subcontractor should provide the engineer with a list of similar projects performed by the same nozzleman. If the rebar is congested, mockups in half the panels should be made with the most congested reinforcing layout that will be shot on the project. Six cores should be taken from each of these panels, half through the rebar and half in unreinforced areas. The unreinforced cores shall be tested for strength according to ASTM C42. The reinforced cores shall be visually graded as per ACI specification 506.2-95. The average core grade shall be less than or equal to 2.5 (on a scale of 1 to 5). The nozzleman shall have two opportunities to make this average grade before being rejected from the project.

During construction, the specifications should require a test panel for each mix, each workday or for every 50 cubic yards of material, whichever is less. The test panels shall be kept moist and at 70 +/- 10 degrees F until moved to the laboratory. The specimens can be taken either from test panels or from the in-place shotcrete. If reinforced specimens are taken from in-place shotcrete, extra reinforcing shall have been placed in the wall for this purpose, above the amount needed to meet the design requirements.

Meetings

After the contractor is selected for the project, a pre-construction meeting should be held with the owner, engineer, architect, inspectors and contractor. The purpose of the meeting should be to establish lines of communication and to review the process contained in the specifications for making

and reviewing substitutions or addressing field conditions that differ from the drawings or specifications. It is important that all parties agree to the process before construction starts, so problems are resolved without finger pointing or unnecessary delays. At this time, the engineer should confer with the contractor to see if there are any details or special circumstances that require a change in the mix design or rebar layout. It is best to resolve as many of these issues before construction starts.

Inspection services

It should be within the engineer's scope of work to provide assistance in the inspection process throughout the project. This will involve time to meet with the contractor and inspector on a regular basis to discuss the progress of the project, upcoming tasks and to review past procedures with the intent of learning from mistakes. Specifically, the engineer should plan on:

- Analyzing all general and special quality objectives defined by the owner or architect
- Analyzing all regulatory requirements set forth by the owner and regulatory agencies
- Establishing acceptance criteria for the materials
- Preparing contract documents that include the design of shotcrete mixes
- Preparing, coordinating, evaluating and reporting all aspect of the quality assurance program as required by the owner
- Recommending or participating in the selection of the contractors, suppliers, materials testing laboratories and field inspectors as required by the owner. This involves checking that the inspectors are ACI qualified, reading the latest review of the labs made by the Cement Concrete Reference Laboratory or the Materials Reference Laboratories, and verifying that the labs are accredited in accordance with ASTM C 1077
- Administering a QA program for insuring that quality is maintained
- Accepting or rejecting workmanship and material
- Evaluating test/inspection data, including submittals
- Reviewing the QA programs and the quality of the work of the contractors, suppliers, testing labs and inspectors throughout the project.

For the plan checker:

The plan checker should confirm that the design engineer's specifications for shotcrete meet the requirements of building codes and standards.

For the field inspector:

The main responsibility of the field inspector is to check that the right material is delivered to the site and that it is prepared and placed properly. The scope of inspection services should include:

- Sampling and testing of shotcrete materials prior to construction and at established intervals during construction
- Use of proven materials and material test reports accepted for some required tests
- Approval of shotcrete mixes based on ACI 301 and ACI 318
- Inspection of batch plant storage, production facilities and delivery trucks prior to construction
- Random inspection of batching operation during construction with checks for yield
- Pre-placement, placement and post-placement inspection of shotcrete activities (including curing) in accordance with industry standards and the contract specifications. Special attention should be paid to encasement, bond, proper application, avoiding

trapped rebound, and extreme weather shotcreting.

- Monitoring of the rate of application between successive layers or lifts, so that no sagging occurs
- Notifying the architect/engineer promptly if problems arise in the field
- Sampling and testing of shotcrete in the field at established intervals by independent testing laboratories or other qualified personnel acting as agents for the owner
- Coordinating laboratory tests of concrete cylinders for acceptance of shoctrete strength
- Providing the owner and engineer with timely reports for all testing and inspection performed
- Interpreting the results of inspections and tests to determine specification compliance and provide appropriate recommendations to the owner and engineer.

Before any material arrives on site, the inspector should verify that:

- The engineer's mix specifications have been properly called out by the contractor
- Batch inspections have been performed according to the specifications
- All necessary material testing has been performed as required.

In addition, the inspector should keep a daily log of:

- Date of inspection
- Area or system inspected
- Item inspected
- Inspection results
- Acceptance criteria
- Statement of compliance or noncompliance
- Remarks
- Inspector's signature and company affiliation
- Weather, temperature and project conditions.

C. Field Inspection Tips

The inspector should bring to the site:

- A current set of plans and specifications, including change orders. If possible obtain a half size or reduced set of drawings that are easily portable.
- Applicable codes and standards to which the project was designed and the requirements of the jurisdiction it is under
- A list of phone and fax numbers and addresses of architects, engineers and other responsible persons
- A notebook or log to keep daily notes
- Necessary forms for filing reports with required agencies
- Pens, pencils, marker crayon, other markers and erasers
- A folding rule or retractable tape and a long steel tape
- A watch.

Included as Figure C2-14 is a graphic showing the various parts of the shotcrete process that should inspected

An important inspection that is required for shotcrete is testing the mix proportions on an applied sample within 30 minutes of application. The goal is to determine the percent total moisture content in the shotcrete and the oven dry aggregate ratio. The method for testing these proportions is described in ACI-506.4R-94, "Guide for the Evaluation of Shotcrete."

It is difficult to determine whether or not voids have been created within the shotcrete. A hammer or chain drag test can be performed to detect and hollow areas or changes in the shotcrete density. Radar or sonic tests can also be used in critical

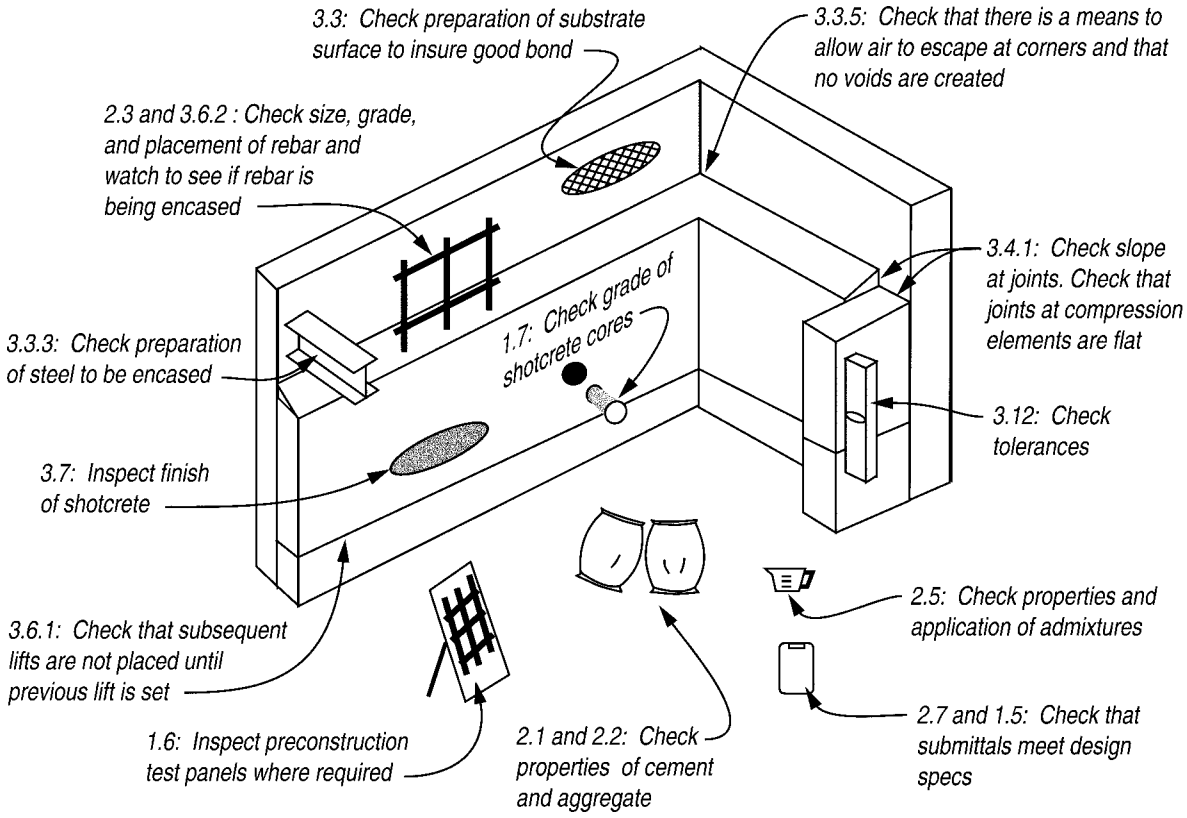

Figure C2-14 Things to check when inspecting shotcrete. Section numbers refer to ACI 506.2-95 Standard, "Specification for Shotcrete."

locations. A tensile bond test can be performed by coring through the shotcrete to the substrate, but not breaking off the sample. The sample is then pulled off and the tensile bond force measured. Density and permeability can be measured by using pressure and absorbency tests. Methods for performing these tests are described in ACI-506.4R-94, "Guide for the Evaluation of Shotcrete."

2.2.4 Precast Concrete

Issues and Concerns. The construction of precast reinforced concrete is similar to cast-in-place concrete with three significant exceptions: *the placement of embedded parts, the lifting of the precast elements* and *the anchorage of the elements* to each other or to cast-in-place elements. These issues need to be carefully controlled if high quality performance is to be achieved. In most other respects, the sections on cast-in-place concrete materials and placement apply to precast concrete.

A. Discussion and Examples:

Precast concrete, as its name implies, is cast in a location different from its eventual location within a structure. Beams, columns and architectural elements are usually cast in a shop and trucked to the building site. Slabs and walls are typically cast on site then tilted up or hoisted into place. This type of construction involves the same basic procedures as construction of cast-in-place concrete: material specification, placement of reinforcing, construction of formwork, batching, placement, finishing and curing. However there are three additional tasks that must be performed and can be sources of poor quality control.

Placement of embedded parts

Because precast elements are individually cast, the structure will not be monolithic, as with cast-in-place concrete. To provide connection between precast elements, dowels, plates, bolts and other means of attachment are typically cast into the elements, so that they can be interconnected once they are placed. It is often difficult to place and maintain the position of protruding elements before the concrete is cast. The Code allows certain type of elements to be placed into the concrete when it is plastic. This is not allowed with cast-in-place concrete because elements placed into a plastic mix have a tendency not to bond well to the concrete. This problem is not lessened in precast concrete, so the practice should be minimized.

Embedded parts cannot be inserted into plastic concrete if the embedded items are required to be hooked or tied to reinforcement within the concrete. If for strength design purposes, the engineer requires that the elements be cast integrally with the concrete, then embedding should be prohibited. If embedding is allowed, the embedded part must be able to be maintained in the correct position while the concrete remains plastic. The concrete around the embedded part must be properly consolidated to prevent voids and poor bond.

The placement of elements that protrude from the concrete, whether or not they are embedded while the concrete is plastic, must be done accurately to insure that the concrete element can be properly attached to adjoining elements once they are fitted up. This is easily the most common problem and cause of poor performance in precast concrete construction. Typical examples include:

- Misplacement of tie down anchor rods at the tops of walls to be connected to wood roof beams. If placement of the anchors is not exact, they will not fit into the hold-down anchors on the beams. Often the contractor will hammer the rods into place after the wall is tilted up, damaging the bond and introducing eccentricities into the connection.
- Misalignment of connective elements between wall panels, walls or columns and beams, or walls and slabs. If the connective elements do not align, a retrofit connection will need to be designed by the engineer, which may introduce undesirable eccentricities in the connection and may of course be costly.
- Missing connective elements. If elements are left out altogether it may be difficult to retrofit the problem, especially if the concrete element is thin. An unattractive solution where the embedded part is attached using through-anchors and plates on the far face of the concrete element may be the only resolution.

Placement of precast elements

Because precast elements must be moved into place they are typically subjected to stresses during handling or fabrication that they will not experience once in their final location. If the engineer designing the element does not know the sequence and procedure for casting and placing the element, these stresses may cause cracking, spalling or even complete failure of the elements before they are in position.

The engineer must design into the elements embedded lifting hooks so that the elements can be hoisted into place without unexpected stresses developing.

Occasionally, an element will be placed in the wrong location. This can lead to failures if unanticipated stresses result.

Anchorage of precast elements to each other and to cast-in-place elements

Unless forces are transferred between elements solely by bearing, some attachment means is needed to make this transfer. If precast elements are connected to other

precast elements, the connective elements typically consist of protruding parts from each element being connected by a third part. If the elements are connected to cast-in-place elements such as a slab or a pilaster, the protruding parts are fully embedded in the cast-in-place element.

For purely bearing elements such as a beam on a pilaster or corbel, the bearing length and the distance of the bearing edge from the free end of the element are critical dimensions. If the elements are cast incorrectly or placed improperly spalling or failure of either element can occur.

When elements are connected to each other, the connection must be able to transfer all anticipated service and factored loads. Since these anchorages may be nonductile, they should be designed so as not to be the weak link in the load path.

In some cases, such as collector and chord elements, the load path needs to be continuous across several elements. The reinforcing steel must be properly spliced at connections between elements and must be continuous within the elements as well. For example, in a wall collector if the reinforcing steel within the wall does not have appropriate Class B splices and there is no connection between the connective elements at a cast-in-place wall pilaster, the collector will not function and may lead to pullout of the embedded parts or cracking in the walls.

B. Resolution of Issues Related to Precast Concrete

For the engineer:

Placement of embedded parts

The engineer should design embedded parts with placement in mind, developing details that can be constructed with high tolerances and that can be set before the concrete is placed. Call out which embedments can be placed when the concrete is plastic and which must be set first. Specify the location of all embedded parts clearly on the drawings and define tolerances in the specifications. The contractor must bear the responsibility for improper placement, and it may be a good idea to note in the specifications that certain critical elements will need to be recast altogether if the embedments are in the wrong locations.

The engineer should also specify a testing program for embedded parts to make sure that they have been properly placed.

Placement of precast elements

The engineer should discuss with the contractor the preferred procedure for casting and moving the elements. It is important that the engineer understand the stresses that the elements will be subjected to from the shop floor, to the highway, to the crane, including temporary shoring stresses, especially in long-span beams or slab elements. The engineer will need to design the section properties and reinforcing steel so that the elements will perform without damage during all these stages of construction.

The engineer will also need to design lifting anchors to permit moving of the elements. These should be clearly shown on the drawings, and you should check them on the shop drawings. Specify tolerances for lifting anchors, as well as other embedded parts.

In addition, specify at what strength the concrete elements can be moved, and that all elements be labeled so that they are placed in the correct locations.

Anchorage of precast elements to each other and to cast-in-place elements

As with embedded parts, design interconnections and anchorages between elements to be constructable and to minimize contractor error. Where possible, make the anchorages ductile and conservatively strong so that small, unanticipated eccentricities will not have a significant impact. As with embedded parts, specify tolerances and requirements for repair of incorrectly placed parts.

In addition, make sure that where forces are transmitted through several elements there is continuous or properly spliced reinforcing steel.

For the plan checker:

Placement of precast elements

The plan checker should request a description of all the expected loading conditions and check the design calculations and drawings for accuracy.

Anchorage of precast elements to each other and to cast-in-place elements

Follow the load path through the elements from the point of application to the point of termination, making sure that there are continuous connection elements along the way, and that they have been designed with the proper strength and ductility.

For the Inspector:

Placement of embedded parts

The inspector should review the drawings and specifications before the elements are cast, to become familiar with the embedment requirements. Discuss with the engineer matters of tolerance and repair of improperly placed parts.

During placement of the parts the inspector should keep a record of the embedded elements, making note of their placement. It is the responsibility of the contractor to develop jigs or measuring devices to place the elements securely in the proper location. It is important that the inspector feel comfortable with these methods so that the placement can be accurately measured and checked.

The inspector should not permit bending, hammering, removal and replacement or other alterations of the location of the embedded parts unless allowed by the engineer. Notify the engineer immediately if this occurs. Make sure that if elements are embedded into plastic concrete, that they are permitted by the specifications and that the concrete is properly consolidated around the part.

Make sure that all protruding parts are cleaned and in good condition after being shipped to the site.

Pull test anchors and embedded parts in accordance with the engineer's specifications.

Placement of precast elements

Discuss with the contractor his/her procedure for casting and moving the elements. Check the locations of the lifting anchors with the drawings and ensure that the elements are not lifted from the wrong points. Also check that unanticipated stresses are not induced on the elements from, say, loading elements on top of each other, or leaning them temporarily against a surface. Pull test the anchors as required in the specifications.

Check that the concrete has achieved its specified strength before it is moved.

Check that damage has not occurred to precast elements during transportation. Some cracking may be acceptable. Check with the engineer or use the references cited at the end of Section 2.2 to determine the severity of the cracking.

Check that all elements are labeled and placed in the correct locations.

Anchorage of precast elements to each other and to cast-in-place elements

The inspector should check that all protruding parts are clean and ready for connection. Check that proper hooks or bends have been made and that they have not been damaged during transportation

The inspector should not permit bending, hammering, removal and replacement or other alterations of the location of the embedded parts unless allowed by the engineer. If the parts are misaligned or are missing, notify the engineer before allowing the contractor to modify the connection details on the drawings.

Check that proper lap splices or mechanical connections are provided in all locations where forces are continuous through elements.

Check that the correct amount of bearing area and edge distance is maintained for bearing-type connections.

2.2.5 Resources

Concrete Materials References and Resources

There are several resources and tools that field inspectors can use to check that concrete materials and shotcrete are prepared properly. References include:

ACI, 1985, *Quality Assurance Systems for Concrete Construction*, American Concrete Institute report, ACI-121R-85, Farmington Hills, Michigan.

ACI, 1995, *Building Code Requirements for Structural Concrete and Commentary,* ACI 318-95 and ACI 318R-95 Reports, American Concrete Institute, Farmington Hills, Michigan.

ACI, 1995, Specification 506.2-95, American Concrete Institute, Farmington Hills, Michigan.

ACI, 1994, *Guide for the Evaluation of Shotcrete*, American Concrete Institute report, ACI-506.4R-94, Farmington Hills, Michigan.

ACI, 1995, *Guide for Concrete Inspection*, American Concrete Institute report, ACI-311.4R-95, Farmington Hills, Michigan.

ACI, 1995, *Specification for Shotcrete, American Concrete Institute* report, ACI-506.2-95.

ACI, 1997, *Guide for Concrete Plant Inspection and Field Testing of Ready-Mixed Concrete*, American Concrete Institute Report, ACI-311.5R-97.

ACI, Specifications for Structural Concrete for Buildings, ACI 301, American Concrete Institute, Farmington Hills, Michigan..

ASTM, Obtaining and Testing Drilled Cores and Sawed Beams of Concrete, ASTM C42-94, American Society of Testing and Materials, Philadelphia, Pennsylvania.

ASTM, Standard Specification for Ready-Mix Concrete, ASTM C94, American Society of Testing and Materials, Philadelphia, Pennsylvania.

ASTM, Standard Specification for Portland Cement, ASTM C150, American Society of Testing and Materials, Philadelphia, Pennsylvania.

ICBO, 1997, *Uniform Building Code*, Chapter 19 – Concrete, International Conference of Building Officials, Whittier, California.

ICBO, 1997, *Uniform Building Code Standards*, Chapter 19 – Concrete, Conference of Building Officials, Whittier, California.

PCI, 1985, Committee on Quality Control and Performance Criteria, "Fabrication and shipment cracks in precast or prestressed beams and columns," *PCI Journal*, May-June, Vol. 30: 3.

PPCI, 1985, *Manual for Quality Control for Plants and Production of Precast and Prestressed Concrete Products*, MNL-116-85 Report, Third Edition, Precast/ Prestressed Concrete Institute.

SEAONC, 1998, *Guidelines for Special Inspection and Structural Observation in Accordance with the 1997 UBC*, Structural Engineers Association of Northern California.

2.3 Reinforcing Steel

Issues and Concerns. Correctly specifying and placing reinforcing steel is fundamental to obtaining good performance of concrete or masonry buildings during earthquakes. Rebar gives these materials the ability to resist bending moments, shear forces and axial tension. It controls concrete cracking, spalling, and shrinkage and expansion caused by temperature or moisture changes. Improper placement can significantly reduce the strength of reinforced concrete and masonry elements.

B. Discussion and Examples

Reinforcing steel gives concrete and masonry the tensile strength necessary to resist high shear, axial tension and bending moments. Rebar is specified by grade and size (Figure C2-15). The grade identifies the rebar's yield stress (e.g. 60ksi) and its material properties (e.g. ASTM A706). The size (e.g., #6) identifies its cross sectional area. When designing a beam, column, slab or wall, the engineer chooses a rebar grade and size and locates it within the element to obtain the desired strength. Sometimes, the wrong grade of reinforcing steel is delivered to the site. The inspector must check that the grade and size are as shown on the structural drawings. Occasionally, using a grade with a higher yield stress or a larger size than called out can be as undesirable as using too low a strength or size. If one element is made stronger than expected, the weak link in a building system may be transferred to a less desirable element. In Figure C2-16, the beam elements may become stronger than the column elements if larger rebar are used than the engineer intended, forcing potential failures into the columns. This is undesirable because columns are less redundant than individual beams and failure can lead to building collapse.

Accurate location of the rebar is an essential component of good design and construction. In a flexural component such as a gravity-load-carrying beam or a lateral-force-resisting frame column, reinforcing steel generally is located as far to the outside of the component as possible, in order to produce the largest moment couple. In other words, the distance between the steel, which

Table 2A ***Properties of ASTM A 615 Steel Reinforcing Bars***

Bar Designation Number	Nominal Weight, lbs per ft	NOMINAL DIMENSIONS		DEFORMATION REQUIREMENTS, IN.			
		Diameter, in.	Cross-Sectional Area, sq.	Perimeter in.	Maximum Average Spacing	Minimum Average Height	Maximum Gap (Chord of 12-1/2 % of Nominal Perimeter)
3	0.376	0.375	0.11	1.178	0.262	0.015	0.143
4	0.668	0.500	0.20	1.571	0.350	0.20	0.191
5	1.043	0.625	0.31	1.963	0.437	0.028	0.239
6	1.502	0.750	0.44	2.456	0.525	0.038	0.286
7	2.044	0.875	0.60	2.749	0.612	0.044	0.334
8	2.670	1.000	0.79	3.142	0.700	0.50	0.383
9	3.400	1.128	1.00	3.544	0.790	0.056	0.431
10	4.303	1.270	1.27	3.990	0.889	0.064	0.487
11	5.313	1.410	1.56	4.430	0.987	0.071	0.540
14	7.650	1.693	2.25	5.320	1.185	0.085	0.648
18	13.600	2.257	4.00	7.090	1.580	0.102	0.864

Figure C2-15 ASTM table showing rebar grading

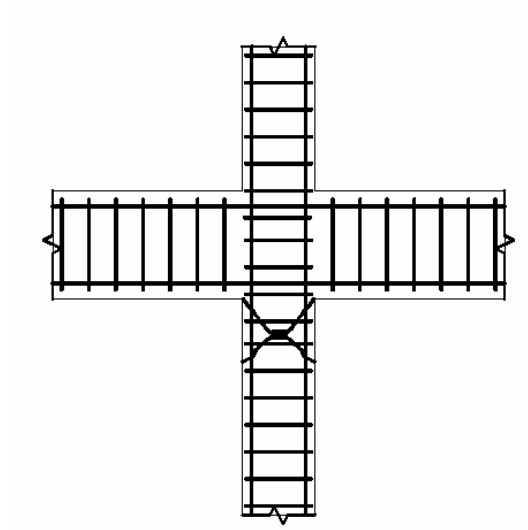

Figure C2-16 Weak column, strong beam condition

gives the section its tensile strength, and the compression edge of the concrete, is maximized. In Figure C2-17, the change in bending strength of a beam is shown when the rebar is placed at different locations. In shallow depth beams, minor variations in rebar location can be significant.

Shear and tensile steel is generally designed with a specific spacing; the closer the bars are spaced, the larger the net area of steel and strength within a given area of concrete or masonry. For example, in a ten-inch thick wall, #5 bars spaced at 12” horizontally and vertically in two curtains (each way/each face, or e.w.e.f.) yield a 0.74 in^2 steel per square foot of concrete in each direction (area of two #5 bars is 0.62in^2, in 10x12” of wall; 0.62*(144/120) = 0.74 in^2. If the spacing is reduced to 10” the net area increases to 0.89 in^2 . In an average wall this may increase the shear strength 10-15%.

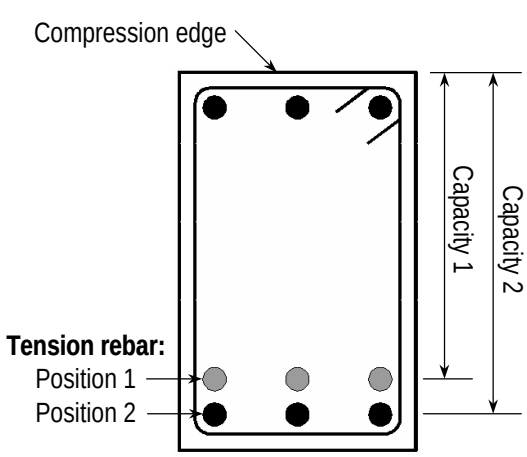

Figure C2-17 Beam flexural capacity

Some rebar also confines other rebar. In a concrete column, vertical rebar adds compressive strength to the section. Under high stresses, this rebar and the concrete have a tendency to buckle outward as shown in Figure C2-18. Horizontal ties are placed around the rebar to prevent this type of failure. Tie spacing and end hooks are critical design parameters. If the ties are spaced too far apart, as in the figure, the vertical bars will buckle in between them. If they lack adequate hooks, the ties may open up, also resulting in buckling.

Figure C2-18 Crushing and spalling of concrete column with widely-spaced spiral reinforcing

Rebar is steel, and will rust if exposed to air and moisture. When rebar rusts, it expands, causing the concrete around it to crack. Figure C2-19 shows a condition of severe oxidation caused by improper coverage. This may cause concrete spalling which eventually leads to more oxidation. To prevent rust, rebar must be covered by concrete or some other coating. When rebar is placed, care must be taken to ensure that

proper coverage is maintained. Inadequate coverage is an issue:

- in design
- when formwork is not placed true
- at rebar bends or warps
- when blockouts, form ties or other elements within the formwork reduce the coverage
- when rebar is improperly supported and sinks or moves to the bottom edge of the element as the concrete is placed.

Without proper inspection, inadequately covered rebar may go unnoticed for several years until a severe oxidation problem appears.

Figure C2-19 Rebar oxidation contributed to this spalling

Rebar bonds with the concrete or grout surrounding it so that the two perform integrally. If the rebar and concrete or grout do not bond, the strength of the reinforced element will be reduced. To bond, rebar must be clean and free of oils and other greasy or flaky materials. It also must be "developed" within the concrete or grout. The longer a piece of rebar is embedded the greater the surface area of contact, and the greater the developed bond strength. This is critically important at joints of beams and columns, and at edges of slabs and walls where forces are delivered from one element to another. Inadequate development of rebar can lead to failures. Long runs of rebar must also be spliced at intervals. Lap splices must be long enough to transfer the forces in the steel from one bar to another adjacent bar through the surrounding concrete or grout.

Rebar also reduces cracking and shrinkage of concrete. If rebar is placed too far apart, or has too much coverage, the volume of concrete that is unreinforced may crack, spall or shrink. Figure C2-21 shows an example of cracking and shrinkage. The building code specifies maximum spacing of rebar to reduce these effects.

It is clear that rebar placement is a critical aspect of controlling performance in reinforced concrete and masonry structures. Too much or too little coverage or improper placement can reduce a section's strength, lead to oxidation of the rebar and cracking of the concrete or cause excessive shrinkage and cracking.

When designing rebar with the considerations above the engineer must also account for the contractor's ability to place the rebar correctly and to pour, pump or spray the concrete or grout around it. Perhaps the most common conflict between engineers and contractors is the former's lack of knowledge about what the latter does in the field. Engineers often do not visualize congested rebar details to see if bars interfere with one another, if hooks can be placed around bars with the desired tightness, or if the construction sequencing is even possible. Construction documents often only show schematic or line drawings of rebar locations, and do not show the actual diameter or bending radii. Contractor

shop drawings often do not show this information either. Once the rebar is manufactured and delivered to the job site, costly delays and redesign may occur if the contractor cannot place the rebar. Alternatively, the rebar may simply not be properly placed. Furthermore, if reinforcing steel is placed too closely, it may be impossible to place the concrete or grout around it. A pump or vibrator may not fit through tightly packed reinforcing. Large aggregate may get stuck between two pieces of rebar, creating a void or pocket. Dropping concrete from a height through highly congested rebar may cause the material to separate, creating layers with too little aggregate and other locations with too little cement. Both of these conditions create weakened areas.

B. Resolution of Issues Related to Reinforcing Steel

For the engineer:

The engineer should clearly state on the drawings and in the specifications the grade of rebar to be used on the project. The fewer grades that can be used the better. Grade 60 rebar is widely available, usually at no significant cost premium over grade 40 steel. If different grades are required, they should be avoided where possible within the same detail to minimize confusion. Likewise, the size of the rebar should be clearly stated on the details. Where epoxy-coated or special weldable rebar in needed, this should be noted.

Only certain types of rebar can be welded. The strength and ductility of the rebar needs to be confirmed if weldable rebar is to be used. Also, the welding details should minimize eccentricities in the rebar and welds.

The drawings should clearly reference the spacing and location of reinforcing steel. Engineers often avoid repeating this information within the drawings to prevent mistakes or contradictions. However, an inspector on site needs to locate the information quickly. The engineer should be consistent in spacing and location of rebar and should include in the general notes or typical details clear and comprehensive notations about each. If a specific detail is not typical, it must be noted clearly so that it can be correctly constructed

It is very important to develop details that are constructable. With the CAD capabilities of many design offices, it is not difficult for a drafter to mock up, even full size, congested rebar conditions. These details, plotted off, can be checked for sequencing and constructability. It may be necessary to add construction sequencing notes on the drawings as an aid to the contractor, particularly where a specific procedure is needed to prevent load path weaknesses at critical connections. Use a rebar bend chart to check that the radii of bends will not interfere with other rebar or coverage requirements.

Limit field bending of rebar as in ACI 318 Section 7.3. Cold bending of rebar is usually permitted; hot bending may not be, depending on the properties of the rebar. Rebar should not be bent after it is embedded in concrete unless it can be determined that the effects are not significant. Field bending of embedded rebar is a common practice among contractors, so this is an item that should be defined clearly in the specifications.

Lap splice lengths need to be called out in the general notes for all possible conditions. The code specifies required lap lengths based on the size, location, confinement and spacing of the rebar, as well as the type of concrete used and whether or not the bars are epoxy coated. The code limits the amount of offset that can occur between lapped bars. This is a common source of construction error and should be held to a minimum.

For the plan checker:

The plan checker should have a systematic method for checking conditions such as coverage, spacing, grade, and size. Create a

checklist of important items to be sure that they have been reviewed. Charts, tables or other tools can help in the review of lap splices, minimum and maximum rebar spacing, development lengths and the length of hooks. Congested rebar locations, like column intersections need to be carefully reviewed for minimum clearances between bars.

Use the UBC or ACI lap length calculation formulas, or the chart included as a Job Aid with this curriculum, to check that the proper lap lengths have been specified.

For the field inspector:

The inspector should have a checklist and tools for inspecting the important items described above. The checklist should be included in the day's report.

Check the grade and size of rebar. Figure C2-20 shows grade and size stamps on reinforcing steel. Once the rebar arrives on site, it should be separated by the contractor to avoid mixing the material. Inspect the rebar at this time to check the grades and to see that it is stored in a manner that will prevent rust or other materials from accumulating on it.

Always use the design drawings, not shop drawings for checking rebar size and placement. The shop drawings are meant for the fabrication of the rebar only, not to assist the contractor in placement.

Check rebar placement in several stages.

- Right before the rebar is placed, check for cleanliness and for proper size and grade markings.
- Each layer or curtain of rebar should be checked for location, spacing, development length, and lap splice length before the next is laid. In a two-foot deep footing, or sixteen–inch wall, it may be very difficult to check the far curtain of steel if the near one is already placed. The contractor should advise the inspector in a timely manner to allow the inspector to check and, if necessary, modify the rebar installation.
- As formwork is erected, check coverage. Do not wait until too much of the formwork is buttoned up or it may be difficult to change. Check that the rebar is securely supported at this time.
- Check with the contractor that there is not too much congestion to place the concrete. Setting rebar, erecting formwork and placing concrete are done by different trades. It is the general contractor's responsibility to insure that the first two are done in a manner that will permit the third, but the inspector can help to head off any problems by checking congestion with the concrete contractor while the rebar is being placed.
- When formwork is buttoned up, it still needs to be checked for coverage. This may be difficult, but at the concrete access locations, the inspector should at

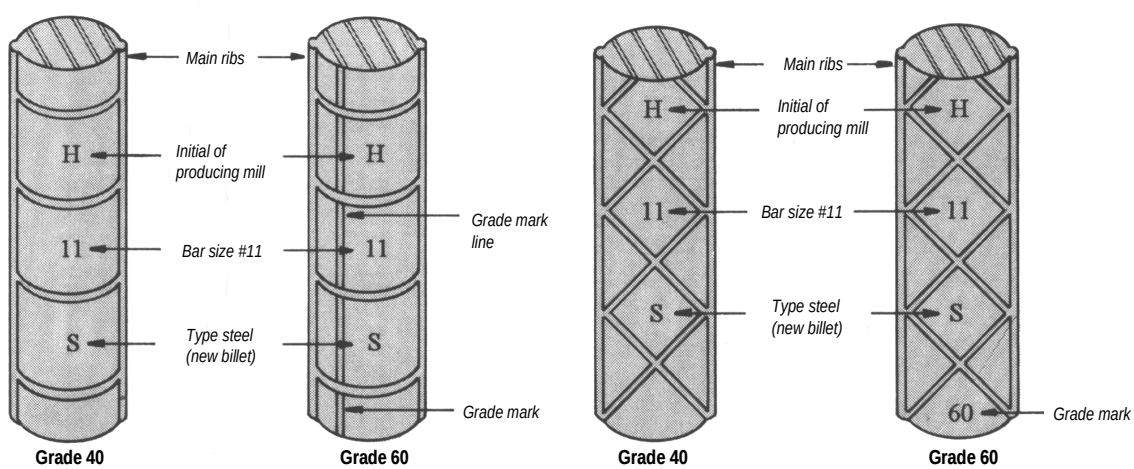

Figure C2-20 Identification marks, line system of grade marks

least, check for proper coverage.

- It is very important to check lap lengths regularly throughout the project. Use the engineer's lap splice requirements on the general notes to check lap lengths, considering rebar size, location, spacing, confinement, coating and type of concrete. Check that offsets in the lap splices are within the engineer's specified tolerance. If they are not, replacement of the rebar or a modification of the detail may be necessary.
- If rebar is to be welded, check that it is of the proper type and that the welding details conform exactly to the design drawings. It is very easy to introduce undesirable eccentricities into the rebar or welds that can cause weak links in the load path. Notify the engineer if the detail cannot be built as the drawings indicate.
- Check that the contractor does not heat bend rebar or bend embedded rebar unless permitted by the engineer. Avoiding the latter will require diligent inspection and probably a preconstruction meeting with the contractor to reiterate the engineer's specifications in this area.

C. Job Aid

A lap splice card is included with this curriculum that can be used to compute lap lengths for various bar sizes, grades and location conditions.

2.3.4 Resources

CRSI, 1996, *Design Handbook*, 8th edition, CRSI publication 1HB, Concrete Reinforcing Steel Institute.

The following CRSI publications are useful:

ASTM A706	*Low-Alloy Steel Deformed and Plain Bars for Concrete Reinforcement*
1DET	*Reinforcing Bar Detailing*
1DETDRG	*Spare Training Program Drawing*
1DETPRG	*Reinforcing Bar Detailer Training Program*
1DETWKB	*Spare Training Program Workbook*
1ECFABG	*Fabrication of E-C Rebar Guide*
1ECRG	*Epoxy Field Handling Guide*
1FIRE	*Reinforced Concrete Fire Resistance*
1MSP	1997, *Manual of Standard Practice*, 1997, 26th Ed.
1PLACE	1997, *Placing Reinforcing Bars*, 1997, 7th Ed.
1RSS	*Evaluation of Reinforcing Steel Systems*
1SPLBK	*Reinforcement Anchorages and Splices*
1TEST	*Reinforcing Bar Testing*
3BCARD	*Designer's Bar Card*
3BCARDM	*Designer's Bar Card (Metric)*
3BCHRTD	*Desk Size Bar Chart*
3BMARKC	*Bar Marking Card* (Metric and in–lb units)

Lesson C3:
Seismic Rehabilitation of Concrete and Masonry Construction—Special Considerations

3.1 In-Situ Testing and Material Properties

Issues and Concerns.. If a building retrofit is to be cost-effective, its existing materials should be used where possible to provide some of the required strength and stiffness. The more effective the existing materials are, the less new construction will be required. It is therefore critical to know as much as possible about existing material strengths and other properties before retrofit design and construction begins.

A. Discussion and Examples

Brick Masonry

In brick masonry buildings, the mortar is typically softer than the bricks themselves, so that the limiting shear strength is governed by the strength of the mortar, specifically the bed joints (the horizontal mortar layers between brick courses). Generally there are two ways to test the shear strength of mortar in-situ.

A "key" test can be used to make a qualitative estimate of the mortar strength. This simply involves scraping the mortar with a key or other metal instrument. No more than a few grains of a high-quality mortar should be able to be scraped off. A medium-quality mortar can probably be scraped off to a depth of 1/16 to 1/8 inch, depending on whether the mortar is exposed to weather. It may be possible to scrape a poor-quality mortar an inch or more. Generally, poor-quality mortar will result in very low usable strengths for a masonry shear wall.

A quantitative test, called an *in-plane shear test*, uses a hydraulic ram to determine the shear strength of the mortar. In a brick wall, a single brick is removed and the head joint (the vertical joint between bricks in a course) of the adjacent brick is cut out. The ram is placed in the space from which the brick was removed and pushes on the adjacent brick. The force on the ram is increased until the bed joints of the adjacent brick crack or show movement. The force applied by the ram, divided by the area of the two bed joints and the collar joint (the vertical joint joining the back of the brick with an inner wythe), is the shear stress on the mortar. This value is calibrated according to ASTM standards for the amount of dead load on the bed joints. A test at the bottom of the wall will typically show a higher shear stress than at the top of the wall, because the dead load increases the effective shear strength of the mortar. The results of the test can be used to calculate the allowable shear stress on the brick wall.

Each of these tests can only be done on an outside wythe of brick. Interior wythes can be tested only if the outer wythe is sufficiently removed to gain access. Typically, inner wythes are not inspected except visually.

It is seldom necessary to test the strength of the brick units themselves. Typically, the mortar is the weak link, but occasionally the brick may be weaker. In this case the brick shear strength should be tested in a lab and calibrated to an allowable strength using ASTM or code guidelines.

Reinforced Concrete

In reinforced concrete construction, it may be necessary to test both the concrete and reinforcing steel strengths, depending on the

age of construction and available documents. Concrete strength can be estimated using a variety of testing methods, but they are typically divided into two categories:

- *Non-destructive testing*, which includes, for example, hammer tests, ultrasound, chain dragging, and x-ray. The purpose of these tests is to calculate the density of the concrete, and thereby estimate the concrete strength. The tests are moderately accurate, and non-invasive.
- *Destructive testing*, which includes, for example, core sampling and chemical analysis. Core samples (not containing rebar) are drilled from a wall, and laboratory equipment is used to test for the compressive, shear or tensile strength of the concrete. Chemical tests can be applied directly to a concrete surface or to a lab sample. The core test is the most accurate way to measure concrete strength, while chemical tests typically are used to determine the material properties of the concrete.

In newer construction, with good drawings and specifications, concrete strength tests typically are not performed. In older construction or in buildings without drawings, where the strength of the concrete needs to be accurately estimated, testing—especially core testing—is important.

Testing rebar is more difficult because it must be removed from the concrete. Typically the rebar is cut out either with a large core machine or by chipping and cutting. The rebar is then tested in the lab for strength, elasticity and weldability if welding is part of the retrofit. The engineer will also note whether the rebar is square, square and twisted, round and smooth, or round with deformation. The type of rebar will affect its bond with the concrete. Again, depending on the quality of available information, rebar testing may not be necessary.

Anchorages

In reinforced concrete and in masonry construction, it may be necessary to test embedded bolts and anchors. A jig is affixed to the anchor which is pulled until failure occurs. The failure mode is typically either a cone-shaped pullout of the substrate, slipping of the bar directly, or yielding of the bar. The type of failure and the failure load give the engineer a measure of the ductility and strength of the anchorage.

B. Resolution of Issues Related to In-Situ Testing and Material Properties

For the engineer:

Clearly state on the drawings and in the specifications the number and type of tests to be performed on each material and for anchorages. ASTM and the UCBC (*Uniform Code for Building Conservation*), published by ICBO, give guidance in the number of tests that should be performed. In some cases the number of tests can be reduced if early tests consistently show high-quality construction. Conversely, the frequency may be increased if the tests give poor results.

Select the locations for the tests. Physically mark the locations on the elements themselves if possible. The tests can be made: 1, in elements that are the most severely loaded in the building; 2, randomly; or 3, on every n^{th} element. The choice should be made in advance.

The locations of the tests should not adversely impact the overall strength of the building or elements. Core tests at the bottom of beams or at the edges of columns, for example, are not desirable. Neither is coring through or taking coupons from critical rebar. Masonry units should not be removed if they support ledgers or joists.

The tests should be performed in advance of the analysis and design so that the best information is available to work with. This is not always possible. In this case, state clearly that the design is contingent upon the elements having the expected, indicated quality. Testing should not be eliminated

from the job unless the assumed quality is shown to be sufficiently conservative.

Request full reports from the inspector, and clearly identify the requested information. The reports should be timely and the contractor should be notified quickly if changes will be required, or if additional testing is necessary.

The drawings should also state how destructive testing is to be repaired, either by patching or by the addition of replacement structural elements.

For the plan checker:

Confirm that the number of specified tests meets the required ASTM or UCBC standards, or the jurisdiction's local ordinances, and that the locations are representative of the elements needing evaluation. Where the strength of an element is of critical importance to the retrofit design, either a permit should not be issued until the tests are performed, or approval of the work should be contingent upon tests being successfully conducted once construction has started. Request copies of the test data which confirm the assumptions made by the engineer in the calculations, and be prepared to notify the engineer or owner if additional testing or design changes are needed.

For the field inspector:

Discuss beforehand with the engineer the types and locations of the tests and perform them as early in the project as possible. Have the engineer mark the exact locations for the tests so there are no misunder-standings.

It is important to follow the ASTM and other testing standards and protocols closely so that the tests are valid; the engineer may be counting heavily on the results.

When taking concrete cores, use a pachometer to locate rebar, and core to avoid the bars. Strength-testing of cores with embedded rebar are invalid.

Understand the specifications for repairing the test locations. Usually this will be the inspector's responsibility, not the contractor's.

Develop comprehensive reporting templates so that as much information as possible is gathered. Check this over with the engineer for approval. Provide draft reports to the engineer as soon as they can be made available, so he can check his design assumptions as early as possible.

C. Resources

ABK, 1986, *Guidelines for the Evaluation of Historic Brick Masonry Buildings in Earthquake Hazard Zones*.

ACI, 1995, *Building Code Requirements for Structural Concrete* and *Commentary*, ACI 318-95 and ACI 318R-95 Reports, American Concrete Institute.

ATC, 1997, *NEHRP Guidelines for the Seismic Rehabilitation of Buildings*, prepared by the Applied Technology Council (ATC-33 project) for the Building Seismic Safety Council, FEMA Report 273, Federal Emergency Management Agency, Washington, D.C.

ATC, 1997, *NEHRP Commentary on the Guidelines for the Seismic Rehabilitation of Buildings*, prepared by the Applied Technology Council (ATC-33 project) for the Building Seismic Safety Council, FEMA Report 274, Federal Emergency Management Agency, Washington, D.C.

ICBO, latest edition, *Uniform Code for Building Conservation*, International Conference of Building Officials, Whittier, California.

SEAOC, 1992, *Seismic Strengthening Provisions for Unreinforced Masonry Bearing Wall Buildings*, Structural Engineers Association of California, Sacramento, California.

3.2 Unforeseen Conditions

Issues and Concerns. The term retrofit describes the improvement of a building's performance by combining new elements and existing structure. Limited field exploration during design rarely gives the engineer a complete understanding of the existing conditions. Consequently, during construction, unforeseen conditions almost invariably arise. This may necessitate the modification of structural details, which if not well controlled and managed, may affect the quality of the work.

A. Discussion and Examples

In new construction, the engineer begins design with a blank slate. He/she is able to detail structural elements without concern as to how they will attach to existing structure. Naturally, architectural constraints still exist, but everything developed by the engineer is a known quantity. Retrofit is completely different. Knowledge about existing conditions can range from none to extensive, depending on the age of the building, the presence and accuracy of as-built or design drawings, and the amount of destructive and nondestructive exploration that is done during or prior to design. The less the engineer knows about the existing conditions, the more uncertain he/she is in being able to predict the performance of the building. In concrete or masonry construction, some examples of unforeseen conditions may include:

- Quality of materials, including layup of masonry, pointing and joint quality, consolidation of concrete, and existence of cracks, spalling, efflorescence or other damage. These issues affect the existing strength that the engineer assumes the building has, and how effectively new elements can be connected.
- Presence, spacing, condition, grade and size of reinforcing or post-tensioning steel. This also affects the existing strength and also how attachments can be made to avoid impacting these elements.
- Connections of diaphragms to walls, columns or beams. This is most often an issue where wood or metal deck diaphragms are attached to concrete or masonry elements.
- Elements that are not plumb, square or level. Elements that are not true can cause problems when anchoring new elements to them.
- Presence of mechanical, architectural or other nonstructural components adjacent to or within concrete and masonry elements. These components may have been installed at the expense of the structure, weakening it, and may make adding new elements difficult.

B. Resolution of Issues Related to Unforeseen Conditions

For the engineer:

The following ideas may be helpful in minimizing unforeseen conditions.

Locate available drawings

The most important task before beginning the analysis of an existing building is to locate all available information about it, the most valuable item being as-built structural drawings. As-builts are supposed to be a set of drawings made after construction is completed, showing all conditions as they were actually installed in the field. Usually this information is hand marked on a set of the design drawings, but in some cases an entirely new set may have been prepared. Changes made in the field such as the location and sizes of elements, the amount of reinforcing steel, material properties, connection details should be included. A comprehensive set of as-built drawings can be a most important tool in analyzing an existing building and designing a retrofit. Unfortunately, they are very hard to come by. While contracts often specify the development of as-builts, they are rarely drawn in a comprehensive way. Older buildings are even less likely to have as-built drawings. Usually, a copy of the design drawings is the best that will be available.

Design drawings are not as good as as-builts, because they may not indicate the actual details used in construction. However, they are very useful for

determining the general location and strengths of elements. The age of the building is not always indicative of the quality of the structural design drawings. Older hand drawn drawings may not look as refined as newer ones that use CADD. However, the quality of a set of drawings is a function of the quality of the engineer and drafter preparing them. The biggest problem with older drawings is usually their physical condition or availability. A good magnifying glass can be a valuable tool to help read old drawings. Also be familiar with terms that may have been used at the time the building was designed to signify rebar (e.g., intermediate or high strength grades, for instance, a rectangle designation to indicate square bars, or the terms "truss bars," "margin steel"), concrete (sand versus stone weight for example). Older engineers can often be a great source of information on terminology.

Architectural or other nonstructural drawings can sometimes be used to locate structural elements, although the details will not typically be called out. A note reading "ten-inch concrete wall, see structural drawings" may be shown on the architectural drawings, or the depth of a penetration into a wall on a plumbing plan. This kind of information is of limited use but can be helpful if you know typical structural design and detailing practices of the time such as grades of steel, strengths of concrete and typical connection styles. In older masonry buildings, the architectural and structural drawings may be the same, though typically the disciplines are separated.

Renovation drawings may also show the location of structural elements, although if so, information will probably be limited to the locations being renovated.

If it is possible to find structural drawings by the same engineer for a building designed around the time of the one being retrofitting, typical styles of construction may be gleaned from them.

Finally, photographic evidence from the building's construction can provide some insight into construction practices, especially for determining how elements were joined together.

Research typical construction and design practices

One way to reduce uncertainties in retrofit design is to learn about construction and design practices from the era the building was built. The first place to look is building codes, then manuals of design for concrete, masonry and reinforcing steel. Spending some time in a university's civil engineering library can be very valuable.

Discussions with experienced engineers may also be helpful in determining how buildings were built at the time.

Perform exploratory work

Some amount of exploratory investigation is absolutely necessary to understand a building's existing conditions. Structures built within the past twenty to thirty years probably do not require extensive exploration, but for older buildings the quality of the construction and the level of deterioration simply cannot be confidently known without actual verification.

Exploratory work can either be destructive or nondestructive. Examples of the former may include:

- Pulling finishes off of walls and ceilings to verify the presence of concrete or masonry behind them
- Drilling into or chipping away the concrete or masonry to confirm its quality, the presence of voids and the location or presence of reinforcing steel
- Coring out samples of concrete or masonry to perform strength tests
- Taking coupons of reinforcing or other steel to test their strength and ductility
- Other tests that require removing portions of structural or nonstructural elements, to confirm the assumptions made about the structure.

Nondestructive exploration may include:

- A complete walkthrough and inspection of the building to take down dimensions and catalogue visible evidence of construction quality and practice
- Pachometering or x-raying structural elements to locate reinforcing steel
- Ultrasonic and hammer tests performed on concrete to determine strength properties.

Clearly, destructive exploration can be more problematical because it may be disruptive, more costly and require repair work—even structural repair. Unfortunately, some measure of destructive exploration is usually necessary to get an accurate picture of the construction quality.

Develop an exploration plan for approval by the building owner. It should be as comprehensive as possible, but recognize that some extrapolation will be inevitable, from the areas which can be explored to the areas which cannot.

Clearly state in the specifications and on the drawings that existing conditions cannot be fully known and that exploration was limited to the areas investigated. Make sure the owner is aware that unforeseen conditions are an inevitable part of retrofit, and while they can be reduced through a comprehensive exploration program, they cannot be eliminated. Unforeseen conditions are also not the engineer's fault. If they require redesign efforts, contractual arrangements should stipulate that the engineer be compensated for the effort. Unforeseen conditions are also not the contractor's fault and the contract should allow for change orders in those situations. It is vital that unforeseen conditions be resolved so that the retrofitted building performance is as intended and so that quality is maintained. Almost invariably, design changes will need to be made; some may be very extensive and even require a complete rethinking of the retrofit system. This is simply the nature of retrofit work. The owner and contractor need to understand this and be prepared for the possible cost implications. Of course, it is also possible that unforeseen conditions may turn out to be beneficial to the project.

If it is necessary to go to the site to view unforeseen conditions, make the trip as useful as possible by bringing drawing materials along. It is always more difficult to take down dimensions and sketches in the field and transfer them back to the office into a design. Detail changes are best drawn up in the field and verified for constructability with the contractor. By doing this it is possible to avoid another trip to the site. Naturally, if extensive calculations are required or review with a manager, returning to the office may be necessary. However, if the calculations are only limited, try to do as much of the design in the field. Do not, however, give the contractor the details developed in the field until they have undergone in-office standard quality control procedures. And in most cases, the engineer's contract with the architect requires that changes go through their office first. Do not short-circuit this process, even if the contractor is demanding the new details immediately. A change order is almost certainly coming, which will need to be approved by the architect or the owner.

For the plan checker:

Plan checking a building retrofit requires that the assumptions the engineer has made regarding existing conditions be very clearly stated, along with the level of exploration that was done. The plan checker cannot, in most instances, go out to the site to evaluate the conditions personally, so the engineer must note the expected strength of concrete, steel, location of reinforcing steel, and typical connection details. This should be done early in the calculations. Because the existing structure may be relied on heavily in the retrofit scheme, the quality and material properties should not be taken for granted. If the plan checker is not satisfied with the amount of exploratory work that was performed or the assumptions that were made, he/she should notify the engineer immediately and request any additional information. In many cases, poor existing conditions will not be discovered nor repaired as part of the retrofit. In these cases

it is all the more important that the plan checker is satisfied with the level of exploration that has been performed.

Plan check comments should include a statement requiring that the assumptions made about construction quality and material properties be confirmed once construction has begun, and that it is the engineer's and contractor's responsibility to notify the building official if any discrepancies are found. If discrepancies are identified, the engineer should be required to make modifications to the satisfaction of the building official. In extreme cases this may mean that the structural drawings need to be resubmitted for permit approval. In most instances, however, some additional calculations or design revisions may be all that are needed.

For the field inspector:

The field inspector's job is a difficult one when observing retrofit. He/she must know what assumptions the engineer has made and be able to identify unforeseen conditions. The inspector also needs to know when an unforeseen condition warrants contacting the engineer and when it substantially complies with the engineer's assumptions. A few helpful ideas for proper inspection of existing conditions are:

- Obtain a list from the engineer of assumptions about construction quality, material properties, dimensions, connection details, and other pertinent building parameters. The engineer should provide this information for all portions of the project in which unforeseen conditions may arise.
- Obtain a copy of the as-built or original design drawings so that the dimensions and details of construction can be identified. Check them with the as-built conditions as they are uncovered.
- Meet with the engineer before construction begins and at regular intervals to discuss issues pertinent to the project.

When unforeseen conditions are discovered, accurate sketches or descriptions need to be sent to the engineer for resolution. Assist the contractor in this task so that the conditions are accurately documented. The engineer will want to know dimensions and how existing elements interact or conflict with new elements. Photographs are often helpful, but they cannot describe the conditions well enough for the engineer to design an alternative detail if necessary. In some instances the engineer will need to make a site visit to get a first-hand look at the condition. However, the plan checker and the contractor should first make a good attempt to sketch out the condition and fax or mail it to the engineer. The engineer would probably be on-site full time if he/she had to look at every unforeseen condition. This is not usually part of the engineer's scope of work. The engineer will rely on the plan checker's observations in most cases.

3.2.4 Resources

When looking for unforeseen conditions the engineer and inspector should bring to the site:

- A current set of plans and specifications, and a set of as-builts or original design drawings
- Existing photographic evidence of construction practices that were used to make assumptions relevant to the design
- A hammer, pick, screwdriver and other implements to perform limited destructive exploration
- A good camera with a zoom and an ability to take close-up photographs
- Sketch pads, rulers, tape measures, scales and other materials for documenting unforeseen conditions
- Pens, pencils, marker crayon, other markers and erasers

3.3 Fiber-Reinforced Composite Systems

Issues and Concerns. A relatively new method of retrofitting concrete and masonry elements is with the application of fiber-reinforced composite systems, also known as "fiber wrap." Because this type of system has not been used extensively, compared with other retrofit methods such as shotcrete, achieving high quality performance of these materials requires close interaction between the design engineer, the inspector and the manufacturer of the fiber wrap system.

A. Discussion and Examples

Fiber-reinforced composite systems typically consist of a mesh of carbon or glass fiber applied in layers to a concrete or masonry element with an epoxy bonding material, and finished with a surface epoxy. The system can be applied to columns, walls, beams, slabs and joints to increase the elements' effective, flexural, shear, axial and bending strength. The system does this in several ways.

- When wrapped around a circular or square column, beam or joint, the system provides additional confinement to the element, which typically increases the allowable compressive strains. This results in higher axial and flexural strength much as spiral reinforcing steel confines the longitudinal steel and concrete core.
- When wrapped as above, the system also can increase the flexural strength of the element by acting as additional tensile reinforcement.
- When wrapped as above, or laid up against a flat surface such as a wall or slab, the system can provide increased shear and out-of-plane flexural strength by acting compositely with the concrete or masonry.
- When wrapped about a zone with lap slices, the system can serve to reduce required lap lengths by increasing the effective confinement of the element.

In all these uses, proper preparation of the concrete or masonry substrate and correct application of the fiber-reinforced composite are essential to achieving quality performance. Poor performance can result when:

- The concrete or masonry has large voids that prevent proper bonding of the system. The system adds strength only when it acts compositely with the substrate or when tightly confining it. If large pockets in the substrate exist, the system will not bond as well, creating local areas of weakness.
- The concrete or masonry elements are not clean or free from loose material. This also can reduce the bonding effectiveness of the system.
- The surfaces of the concrete or masonry elements are not flat. In an application against the surface of a wall or slab, if the element contains undulations or protrusions, forces normal to the plane of the composite system can be developed. The fiber system has no strength out-of-plane unless it is acting as a tension ring providing confinement. If normal forces are applied to the system, it may unbond from the element and crack or break.
- The corners of square or rectangular elements are left sharp. When this happens, local stress concentrations can occur in the fiber. The fiber's effectiveness as a pure tension ring for confining the element is also reduced.
- The concrete or masonry elements are not prepared properly. Typically a "primer" coat is applied to the surface to enhance the bond with the fiber.
- The fiber-reinforced composite system is not laid up properly. Application of the system is a very specialized effort, requiring applicators experienced in its use. As the system is relatively new, experienced applicators are in demand. Specialized application equipment is also required. Improper application of the fiber and layers of epoxy can lead to debonding, delamination and ultimately poor performance. Again, the system

has strength as when acting compositely with the concrete and masonry. The succeeding layers of fiber and epoxy must all form an integral bond with the substrate to be effective.

- The system is not finished properly. Exterior weather exposure can reduce the performance of the material over time.

B. Resolution of Issues with Fiber-Reinforced Composite Systems

To achieve quality performance, the following design and quality control measures should be taken:

Proper application of fiber-reinforced composite system

The system has a variety of applications but it cannot be used effectively in all cases. The purpose of the system should be for one of the uses described above. Extensive testing has been performed by the manufacturers and ICBO approval has been obtained for specific uses. Using the system in other ways may not be effective. If the concrete or masonry substrates cannot be prepared properly for the application of the system, other methods of retrofit may be necessary.

Proper selection of fiber-reinforced composite materials

Using the correct material, including fiber mesh, epoxies and bonding agents is essential to achieving desired results. The materials should be part of an entire system provided by a single manufacturer. Neither the engineer nor the contractor should attempt to specify or obtain the individual elements of the system from across manufacturers. Because this is such a specialty system, the manufacturer should be integrally involved in the proper selection of the materials.

Proper design of system

The engineer must use proper design equations to calculate the strength of the composite system and the increased strength of the existing concrete or masonry elements. While the equations should be similar between manufacturers of similar products, the engineer should always check that the manufacturer agrees that the correct equations are being used.

Proper specification of materials and application procedure, and correct detailing, on construction documents

The engineer should work closely with the manufacturer to write a specification for the system. The manufacturer should have a boiler plate specification that can be tailored for a specific job. The specification should include the type of materials and the manufacturer, with no substitutions allowed, the requirements for substrate preparation and the requirements for mixing, applying and finishing the fiber system. The drawings should clearly show the extent of the application and fully note special conditions. The drawings should indicate the number of layers, the fabric orientation and splice details.

Development of a quality control program

The manufacturer should provide the engineer with a quality control procedure for the preparation and application of the fiber system. The contents of a good quality control program should include the following:

Provided by the system manufacturer

- Inspection of all materials
- Training of applicators
- Review of sample testing reports prepared by independent testing agencies
- Providing and keeping of records on certification of materials
- Ensuring that an independent audit is completed.
- Providing of installation procedures for the owner and inspector.

Provided by the applicator

- Completion of project report sent to manufacturer and engineer

- Ensuring that samples are sent to an approved testing laboratory
- Ensuring proper installation.

Provided by the material manufacturers

- Providing of certification reports and material labels.

By the owner or owner's representative

- Coordination of the installation inspection and testing as required

Proper preparation of substrate

The concrete or masonry surfaces to which the fiber-reinforced system is to be applied must be prepared in accordance with the specifications. Surfaces receiving fabric need to be free from sharp edges and protrusions, and large voids in concrete need to be repaired. Corners must be rounded. The preparation needs to be inspected for conformance with the project specifications. Typically, the inspection should be made by the project field inspector and a representative of the manufacturer.

Proper mixing of epoxy resins

The inspector and manufacturer's representative should monitor the mixing of epoxy resins to ensure that the correct ratios are used and that proper mixing time is allowed.

Proper application of the fiber and resin

The inspector and manufacturer's representative should monitor the application of the primer coat and the successive layers of fiber and resin. It is important to make sure complete coverage and bond is obtained, the fibers are saturated properly, the fiber is laid up in the proper orientation with correct splice locations, and that it is finished properly.

Proper application of the fiber and resin

The inspector is responsible to take field samples of the fiber and resin as required by the specifications and store them properly for shipment to a testing laboratory. The specifications should identify the quantity and size of the samples and the storage means.

3.3.4 Resources

Resources for the development of project specifications and drawings are best obtained from the manufacturer of the fiber-reinforced composite system that will be used. References include:

Fyte, 1998, *Quality Control Manual for the Tyfo Fibrwrap System*, Fyfe Co. LLC.

Fyte, 1998, *Design Manual*, Fyfe Co. LLC.

ICBO, 1997, *Acceptance Criteria for Concrete and Reinforced and Unreinforced Masonry Strengthening Using Fiber-Reinforced Composite Systems*, International Conference of Building Officials.

ICBO, 1997, *Uniform Building Code*, Chapter 19, – Concrete, International Conference of Building Officials, Whittier, California.

ICBO, 1997, *Uniform Building Code Standards*, Chapter 21 – Masonry, International Conference of Building Officials, Whittier, California.

Job Aids

Job Aid:
Checklist for Design of Masonry

Structural Notes

1. ❍ Applicable code specified (city and date).
2. ❍ Applied loads shown including wind, seismic and live loads.
3. ❍ Is the masonry strength f'm specified?
4. ❍ Is the method to verify the f'm specified? (Unit strength method).
5. ❍ Is type S mortar specified?
6. ❍ Is high or low lift grouting specified?
7. ❍ Are cleanouts required?
8. ❍ Is special inspection required? Are prism tests required?
9. ❍ Have full allowable stresses been used in the design?

Design

10. ❍ Is h/t less than 30? If not, verify calculations.
11. ❍ Is the wall laterally supported with straps or other methods capable of resisting at least 420 lb/ft?
12. ❍ Does the bar fit in the cell?
13. ❍ Are locations of laps shown (Min. 48 dia.)? Are they in locations were stresses are less than 80% of the allowable?
14. ❍ Are dowel laps sufficient (Min. 48 dia.)?
15. ❍ Is there continuous horizontal reinforcement at the window, and door head?
16. ❍ Is there continuous horizontal reinforcement at the floor?
17. ❍ Are window and door connections designed and shown on the drawings?
18. ❍ Are there expansion joints at the corners?
19. ❍ Are there provisions made in connections to accommodate thermal movement? (Steel roof rigidly attached at a masonry corner)?
20. ❍ Is the brick masonry confined between other materials without expansion joints?

Specifications

21. ❍ Is a color, pattern and workmanship panel required?
22. ❍ Is a grouting demonstration panel required?
23. ❍ Are materials specified in accordance with the correct standards? ❍ Brick?
    ❍ Is the Hollow clay brick of sufficient strength? ❍ Cement? ❍ Lime? ❍ Sand?
    ❍ Grout? ❍ Mortar? ❍ Is the mortar specified by proportions?
    ❍ Reinforcement? ❍ Is weldable steel required?
24. ❍ Are there requirements for handling and storage of materials?
25. ❍ Is there a requirement for a preconstruction meeting?
26. ❍ Are shop drawings required?
27. ❍ Are control joint size and materials specified?
28. ❍ Are sealant compatibility tests required?
29. ❍ Are the cleaning methods included?
30. ❍ Does the specification require wetting of the brick?
31. ❍ Are the joint finished specified? If raked joints are used is this in the analysis?
32. ❍ Are weep holes and fill materials specified?
33. ❍ Is the sealing procedures and materials specified?
34. ❍ Are cold weather and hot weather construction provisions included?
35. ❍ Are requirements for protecting the work included?
36. ❍ Is it required to verify dimensions prior to laying the masonry?
37. ❍ Is a written quality control procedure required?
38. ❍ Are prism teat requirements included both prior to construction and during construction?

Job Aid:
Inspection Checklist for Masonry Construction

Plans

1. ❍ Is continuous inspection necessary?
   ❍ Are called inspections necessary?

Materials

2. **Concrete masonry units**:
   ❍ Type and quality
   ❍ Strength of the masonry complies with plans
   ❍ Is a laboratory test required?
   ❍ Correct size and type, (per UBC Standard Nos. 21-4, 21-5).
   ❍ Curing (UBC Standard Nos. 214, 21-5)
   ❍ Cleanliness.
   ❍ Soundness (UBC Standard Nos. 21-4, 21-5)
   ❍ Are required inspection holes provided?
3. **Sand:**
   ❍ Cleanliness
   ❍ Quality and fineness
   ❍ Compliance with code requirements (ASTM C144)
4. **Cement:**
   ❍ Meets requirements of the UBC Standards (UBC Standard No. 21-15).
5. **Aggregates:**
   ❍ Meet the requirements of UBC Standards (ASTM C144 and C404).
6. **Lime:**
   ❍ Conforms to the UBC Standards (UBC Standard No. 21-13).
7. **Water:**
   ❍ Is clean and free from harmful substances.
8. **Plasticizing agents:**
   ❍ Bonform to Standards.
9. **Admixtures conform to the following requirements:**
   ❍ Have been approved.
   ❍ Are of right quantity.
   ❍ Are not used with plastic cement.
10. **Reinforcing steel:**
    ❍ Kind and grade.
    ❍ Max. Size (UBC No. 2107.2.2. 1)

Workmanship

11. ❍ Sample panels have been provided and approved, if required.
12. **Mortar:**
    ❍ Proportions of the mortar mix and time of mixing.
    ❍ Consistency of mortar.
    ❍ Clean water is used
    ❍ Mortar is properly handled in mixing
    ❍ Mortar is not excessively retempered.
    ❍ Work is kept dry at all times.
    ❍ Mortar classified by type and use (UBC Table No. 21-A)
13. **Grout:**
    ❍ Proportions (UBC Table No. 21-B).
    ❍ Consistency.
    ❍ Compressive strength (UBC Standard No. 21-19).
    ❍ Handling.
    ❍ Segregation.

Construction

14. **Bearing on solid masonry:**
    ❍ Suitability of bearing masonry
    ❍ Size of bearing masonry
    ❍ Location of bolt ties (UBC No. 2106.3.7)
    ❍ Size, length, placement and embedment of connectors.
15. **Masonry on concrete:**
    ❍ Width and depth of footing excavations.
    ❍ Anchorage around main steel
    ❍ Grouting and metal inserts
    ❍ Type, spacing and material of ties.
    ❍ Embedment of ties or connection to main steel.
16. ❍ Proper sill material and anchorage of supporting members to footings.
17. **Head, bed, end and wall joints:**
    ❍ Correct size and type
    ❍ Buttered where required
    ❍ Joints where fresh masonry is joined to set masonry.
    ❍ Properly filled with mortar. (Exception: UBC No. 2104.4.4).
    ❍ Watertight (bug holes filled).

Job Aid:
Inspection Checklist for Masonry Construction (continued)

Construction (continued)

18. **Reinforced hollow unit masonry:**
    - Vertical alignment and continuity of cells
    - Requirements when work is stopped for one hour or longer.
    - Leakage of grout.
    - Cleanout openings for pours over 5 ft. (15 m) (UBC No. 2104.6. 1).
    - Overhanging mortar.
    - Sealing of cleanout cells.
    - Position of reinforcement.
    - Reinforcing hooks and splices (UBC Nos. 2107.2.2.5, 2107.2.2.6).
19. Racking and toothing at wall intersections.
20. Corners and returns.
21. **Reinforcing steel:**
    - Clearances.
    - Deformation.
    - Additional steel around openings (UBC No. 2106.1.12.3 Item 3)
    - Placed within allowable tolerances (UBC No. 2104.5).
22. **Connections:**
    - Size and location of joist anchors.
    - Size, location and number of bolts
    - Size and location of dowels
    - Location of stirrups.
    - Veneer ties (if any)
23. Separation between buildings.
24. Thickness of the walls.
25. Size of bond beams.
26. Placement of headers and lintels of material other than masonry.
27. Wall ties.
28. **Unprotected steel supporting members:**
    - Correct location of mechanical installation supports.
    - Size and location of bolts and connections.
    - Size and spacing of bracing connections.
    - Size and alignment of connection holes.
    - Shims and dry packing.
    - Location and size of stiffeners.
    - Size and alignment of base plates.
29. **Anchoring of wood floor joists to supporting masonry members:**
    - Required size of ledges.
    - Required size, spacing and length of bolts and joist anchors.
30. **Where floor joists are parallel to the wall:**
    - Placing of required blocking.
    - Type of anchors required.
    - Use of proper connections to anchors.
31. **Floor joists tying to a masonry wall:**
    - Required size, spacing and bearing of joists
    - Required air space around joists
    - Required anchors
    - Required bridging and/or blocking
    - Connection to ledger
    - Required connectors for anchors
32. **Where fire-resistant floors are required.**
    - Proper material for fire resistance
    - Required thickness of floor slab
    - Required supports
    - Required reinforcing
    - Required time for supports and forms to remain in place for concrete floors
33. Contraction joints and control joints are located and provided as indicated or required.
34. Weepholes are provided if required.
35. **Chases.**
    - Location and spacing on approved plans.
    - Purpose.
    - Maximum permitted depth.
    - No reduction of the required strength and fire resistance of the wall.
36. **Where there is a change of thickness in non-bearing walls**
    - Locate the position on plans.
    - Required top plates comply.
    - Location of ties, anchors, bolts and blocking.
37. **Corbeling:**
    - Maximum projections
    - Bonding and anchorage
    - Required temporary supports
    - Required reinforcing.
38. Pointing, replacement of defective units, and repair of other defects are promptly performed.
39. Waterproofing of walls is performed as required.
40. Methods of final cleaning are as required.

Job Aid:
Class B Lap Splice Table*

			#3						#4						#5						#6			#7			#8			#9			#10			#11			#14			#18		
	F_y steel		40ksi			60 ksi			40ksi			60 ksi			40ksi			60 ksi			60 ksi			60 ksi			60 ksi			60 ksi			60 ksi			60 ksi			60 ksi			60 ksi		
	f'_c conc.		3	4	5	3	4	5	3	4	5	3	4	5	3	4	5	3	4	5	3	4	5	3	4	5	3	4	5	3	4	5	3	4	5	3	4	5	3	4	5	3	4	5
Loc.	Weight	Coating*																																										
Clear spacing & cover >= db and stirrups as prescribed, or clear spacing >= 2db & cover >= db																																												
Top Bars	Normal	1	19	17	16	28	25	22	25	22	20	38	33	29	31	27	24	47	41	36	56	49	44	81	71	63	93	81	72	105	91	81	116	101	90	128	111	99	162	141	126	209	181	162
		2	23	20	18	34	29	26	30	26	23	45	39	35	38	33	29	56	49	44	67	58	52	98	85	76	112	97	87	125	109	97	139	121	108	153	133	119	195	169	151	250	217	194
		3	28	25	22	42	37	33	38	33	29	56	49	44	47	41	36	70	61	54	84	73	65	122	106	95	139	121	108	157	136	121	174	151	135	191	166	148	243	211	189	313	271	242
	Light	1	25	21	19	37	32	28	33	28	25	49	42	38	41	35	32	61	53	47	73	63	56	106	92	82	121	105	94	136	118	105	151	131	117	166	144	129	211	183	164	271	235	210
		2	29	26	23	44	38	34	39	34	30	58	51	45	49	42	38	73	63	56	87	76	68	127	110	98	145	126	112	163	141	126	181	157	140	199	172	154	253	219	196	325	282	252
		3	37	32	28	55	47	42	49	42	38	73	63	56	61	53	47	91	79	70	109	94	84	158	137	123	181	157	140	204	176	158	226	196	175	249	215	193	316	274	245	407	352	315
Not Top	Normal	1	16	16	16	22	19	17	19	17	16	29	25	23	24	21	19	36	31	28	43	37	34	63	54	49	72	62	56	81	70	63	90	78	69	98	85	76	125	108	97	161	139	125
		2	18	16	16	26	23	20	23	20	18	35	30	27	29	25	23	43	37	34	52	45	40	75	65	58	86	74	67	97	84	75	107	93	83	118	102	92	150	130	116	193	167	149
		3	22	19	17	33	28	25	29	25	23	43	37	34	36	31	28	54	47	42	65	56	50	94	81	73	107	93	83	121	105	94	134	116	104	147	128	114	187	162	145	241	209	187
	Light	1	19	17	16	28	25	22	25	22	20	38	33	29	31	27	24	47	41	36	56	49	44	81	71	63	93	81	72	105	91	81	116	101	90	128	111	99	162	141	126	209	181	162
		2	23	20	18	34	29	26	30	26	23	45	39	35	38	33	29	56	49	44	67	58	52	98	85	76	112	97	87	125	109	97	139	121	108	153	133	119	195	169	151	250	217	194
		3	28	25	22	42	37	33	38	33	29	56	49	44	47	41	36	70	61	54	84	73	65	122	106	95	139	121	108	157	136	121	174	151	135	191	166	148	243	211	189	313	271	242
Other Cases																																												
Top Bars	Normal	1	28	25	22	42	37	33	38	33	29	56	49	44	47	41	36	70	61	54	84	73	65	122	106	95	139	121	108	157	136	121	174	151	135	191	166	148	243	211	189	313	271	242
		3	42	37	33	63	55	49	56	49	44	84	73	65	70	61	54	105	91	81	125	109	97	183	158	142	209	181	162	235	203	182	261	226	202	287	249	222	365	316	283	469	406	363
	Light	1	37	32	28	55	47	42	49	42	38	73	63	56	61	53	47	91	79	70	109	94	84	158	137	123	181	157	140	204	176	158	226	196	175	249	215	193	316	274	245	407	352	315
		3	55	47	42	82	71	63	73	63	56	109	94	84	91	79	70	136	118	105	163	141	126	237	206	184	271	235	210	305	264	236	339	294	263	373	323	289	474	411	368	610	528	472
Not Top	Normal	1	22	19	17	33	28	25	29	25	23	43	37	34	36	31	28	54	47	42	65	56	50	94	81	73	107	93	83	121	105	94	134	116	104	147	128	114	187	162	145	241	209	187
		3	33	28	25	49	42	38	43	37	34	65	56	50	54	47	42	81	70	63	97	84	75	141	122	109	161	139	125	181	157	140	201	174	156	221	191	171	281	243	218	361	313	280
	Light	1	28	25	22	42	37	33	38	33	29	56	49	44	47	41	36	70	61	54	84	73	65	122	106	95	139	121	108	157	136	121	174	151	135	191	166	148	243	211	189	313	271	242
		3	42	37	33	63	55	49	56	49	44	84	73	65	70	61	54	105	91	81	125	109	97	183	158	142	209	181	162	235	203	182	261	226	202	287	249	222	365	316	283	469	406	363

* 1 = uncoated
2 = epoxy coated w/ cover <3db or clear spc. <6db
3 = other epoxy coated

Notes:
1. Splice lengths are rounded up to the nearest inch
2. Divide by 1.3 for Class A splices or for developent lengths of deformed bars in tension
3. Lower values may be obtained by using equation 12-1 in Section 1912.2.3

*Table Based on *Uniform Building Code* (ICBO, 1997), Section 1912.2.2

Table of Contents - Nonstructural Building Components

Briefing Paper 5: Seismic Response of Nonstructural Components

Briefing Paper 6: Seismic Code Requirements for Anchorage of Nonstructural Components

Lesson N1 General Seismic Considerations of Nonstructural Building Components

1.1 General Seismic Considerations ----------N-1

Lesson N2 Improving the Earthquake Performance of Typical Nonstructural Building Components

2.1 Architectural: Interior Suspended Ceiling ----------N-7

2.2 Architectural: Interior Partitions ---------- N-11

2.3 Architectural: Glazing ---------- N-13

2.4 Architectural: Glass Block and Other Nonstructural Masonry ---------- N-17

2.5 Architectural: Cladding ---------- N-19

2.6 Architectural: Parapets ---------- N-23

2.7 Mechanical and Electrical: Floor- or Roof-Mounted Equipment ---------- N-25

2.8 Mechanical: Suspended Equipment, Ducts and Pipes ---------- N-31

2.9 Mechanical: Water Heaters ---------- N-43

2.10 Electrical: Interior Lights ---------- N-45

Job Aids

Standard Details for Bracing of Suspended Ceilings and Standard Detail for Bracing Interior Non-Load-Bearing Partitions, with supporting documentation conforming to the 1997 Uniform Building Code

Coordination Matrix for Nonstructural Building Component Anchorage or Bracing

List of Figures – Nonstructural Building Components

N1-1 Suspended ceiling damage ---------- N-1
N1-2 Suspended ceiling bracing ---------- N-2
N1-3 Partition damage ---------- N-2
N1-4 Partition wall bracing ---------- N-2
N1-5 Glass pane failure ---------- N-3
N1-6 Failed parapet ---------- N-3
N1-7 Out-of-plane strengthening ---------- N-4
N1-8 Cladding failure ---------- N-4
N1-9 Retrofitted cladding attachments ---------- N-4
N1-10 Rooftop mechanical equipment fallen off supports ---------- N-5
N1-11 Mechanical equipment with snubbers ---------- N-5
N1-12 Pipe damage in 1971 San Fernando earthquake ---------- N-5
N1-13 Angle bracing for pipe ---------- N-6
N2-1 Earthquake-damaged ceiling ---------- N-7
N2-2 Elements of a properly braced ceiling ---------- N-7
N2-3 Light fixture with separate support wire ---------- N-8
N2-4 Example ceiling seismic joint ---------- N-8
N2-5 Failed wall, damaging ceiling and furnishings, and endangering lives ---------- N-11
N2-6 Typical configuration of an unbraced ceiling ---------- N-11
N2-7 Partition braced by diagonal “kickers” whose top ends are attached to structure above ---------- N-12
N2-8 Example of a ceiling brace design ---------- N-12
N2-9 Partition braced to cross walls ---------- N-12
N2-10 Partition braced to a structural wall ---------- N-12
N2-11 Canopies at exits for protection from falling glass ---------- N-14
N2-12 Damaged brick veneer can be a falling hazard ---------- N-17
N2-13 Damaged cladding can become a falling hazard ---------- N-19
N2-14 Failure of cladding elements ---------- N-19

N2-15 Typical anchor arrangements for precast cladding units ---------- N-20
N2-16 Connections for precast concrete cladding ---------- N-20
N2-17 Typical connection for precast concrete units ---------- N-21
N2-18 Bracing of parapet at concrete slab ---------- N-23
N2-19 Bracing of parapet at wood roof ---------- N-23
N2-20 Strengthening of parapet with reinforced shotcrete overlay ---------- N-23
N2-21 Strengthening of parapet with steel braces ---------- N-23
N2-22 Vibration isolation assembly with lateral stops ---------- N-25
N2-23 Seismic restraint added to existing equipment ---------- N-25
N2-24 Multidirectional seismic restraint ---------- N-26
N2-25 Example isolator with seismic restraint ---------- N-26
N2-26 Example seismic restraint ---------- N-26
N2-27 Example of bushing ---------- N-28
N2-28 Example of weldwasher ---------- N-28
N2-29 Representative appliance ---------- N-28
N2-30 Movement of unrestrained pipe in an earthquake ---------- N-32
N2-31 Piping failure. Temporary shoring provides support ---------- N-32
N2-32 Failure of typical pipe hanger support that pulled out of flange prestressed concrete double-tee ---------- N-32
N2-33 A roof-hung mechanical unit with seismic bracing and flexible connection ---------- N-33
N2-34 Typical bracing for round ducts ---------- N-34
N2-35 Typical bracing for round ducts ---------- N-34
N2-36 Typical bracing for rectangular ducts ---------- N-34
N2-37 Typical bracing for pipes ---------- N-35
N2-38 Typical bracing for pipes ---------- N-35
N2-39 Typical bracing for pipes ---------- N-35
N2-40 Unintended typical bracing for pipes ---------- N-35
N2-41 Restraint of sprinkler heads by sheetrock ---------- N-37
N2-42 Detached sprinkler head broken as a result of pounding against structural features ---------- N-38
N2-43 U-hooks provide only gravity load support ---------- N-38
N2-44 Typical bracing for pipes ---------- N-39

N2-45 Specially engineered braces for recurring short sections of pipe ---------- N-39
N2-46 Typical bracing modification for pipes---------- N-40
N2-47 Typical bracing of a water heater on the ground floor ---------- N-45
N2-48 Lay-in fluorescent light fixture ---------- N-45
N2-49 Stem-hung fluorescent light fixture---------- N-45
N2-50 Surface-mounted fluorescent light fixture ---------- N-45
N2-51 Chain-hung fluorescent light fixture---------- N-46
N2-52 Typical wire hanger connection details ---------- N-47

Briefing Paper 5

Seismic Response of Nonstructural Components

Part A: Overview of Component Types and Behavior

Introduction

This Briefing Paper 5, *Seismic Response of Nonstructural Components*, consists of three parts that discuss how earthquakes affect a variety of nonstructural building components, and how they should be anchored or braced to resist seismic forces. This Part A provides background on the damage earthquakes can cause to nonstructural components, defines the types of systems and equipment that can be affected, and describes the way they respond to earthquake motions. Part A also discusses various methods of anchorage systems and their limitations. Parts B and C describe the vulnerability and proper anchorage methods for seven specific types of nonstructural components.

Typical Nonstructural Components

The term nonstructural components refers to the systems, parts, and equipment that do not carry vertical and horizontal loads. These include architectural elements such as suspended ceilings and partitions; mechanical elements such as HVAC ducts and plumbing pipes; electrical elements such as lights and switch gear, as well as other parts of the building envelope like window walls, cladding, veneers, and parapets. Nonstructural components are permanent built-in items rather than building contents and furniture, which are typically movable. Seismic performance of building contents is also an important topic, but it is not covered in this Briefing Paper.

Nonstructural component damage is a frequent cause of earthquake-related fires.

How Earthquakes Affect Nonstructural Building Components

The seismic response of nonstructural building components is an important concept to be understood by those responsible for writing specifications or detailing the installation of these components. It must also be understood by those responsible for installing and inspecting components. Many injuries, and often more than one-half of the total economic loss in an earthquake, stem from or are related to damage to nonstructural components. The economic losses are not limited to the cost of repairing the damaged components; they often include damage to other equipment and building contents plus the extensive loss-of-use costs associated with repairs and restoration. In fact, these collateral losses can be greater than the cost of repairing structural damage. Nonstructural component damage is a frequent cause of earthquake-related fires, which can result in the total loss of a building and its contents. Leaks and spills of hazardous materials from inadequately braced piping or fluid tanks can threaten the health of those located in a wide area around a damaged building.

The different physical characteristics of nonstructural components affect their response to earthquake motions. Therefore, appropriate means of preventing damage will also vary. Specific component response depends on several parameters.

The mass of the object is important because the earthquake forces acting on every nonstructural component depend on their mass. As described in Briefing Paper 1, Part B, these are known as inertial forces. Inertia results in heavier components requiring anchorage that can resist larger forces.

The location of the component with respect to the base of the building is important because the roof and upper stories are subject to larger motions and accelerations. All buildings are to some extent structurally flexible, and the size of the lateral drift is cumulatively larger with each increasing story. This effect has only recently

been addressed in the 1997 *Uniform Building Code* (UBC) requirements for designing the anchorage of nonstructural components.

The flexibility of a nonstructural component affects its response to earthquake motion. Examples of flexible components include cantilevered parapets, chimneys and storage racks anchored only at their base (Figure 1). With the top edge or end free to move, these are much more flexible than components braced at both the top and bottom. These flexible components experience a whiplash effect and are subject to greater earthquake forces than are rigid components.

The method of anchorage also affects response. A flexible connection may be necessary for proper functioning of the component under normal conditions. For example, an HVAC unit mounted on vibration isolators is a relatively rigid piece of equipment that is flexibly mounted. The flexible mounting allows earthquake motions to be amplified if resonance occurs, and consequently the equipment's anchorage must be designed for higher forces. In other cases, the anchorage or bracing may be rigid to provide maximum restraint. In such cases, the anchorage can be designed for lower forces.

Connections using ductile materials (e.g., bolts, nails, and light-gauge steel connectors) are well-suited to resist the dynamic cyclic motions produced by earthquakes. Certain types of connections (e.g., adhesives) are deemed nonductile because they are susceptible to sudden failure. Although they are permitted to be used, the 1997 UBC requires the use of higher force levels when designing these nonductile connections.

Failure Modes Resulting in Damage and Potential Injuries

Damage and serious injuries can result from several failure modes observed in nonstructural components. Unrestrained objects can fall, slide, overturn or swing when acted upon by earthquake forces, depending on their location, size, shape, and orientation of attachment to the building. Falling hazards are the largest cause of serious injuries. Consequently, parapets, exterior cladding or veneer (Figure 2), suspended equipment, and heavy ceilings (Figure 3) are of great concern and should be the top candidates in any retrofit project. Components with a high center of gravity and a relatively small base such as electrical switch gear panels, storage racks, and interior partitions are likely to overturn, posing a significant safety hazard. Items that are mounted on floors, roofs, or platforms are primarily susceptible to sliding. However, that sliding movement can sever electrical and piping connections, causing fire hazards or water damage. Sliding can also cause physical damage to the component itself and to adjacent components. A suspended component with only vertical support, or less-than-sufficient bracing, can swing like a pendulum, breaking piping or electrical connections and colliding with other nearby components. If the swinging motion damages the vertical support connections these items can fall on occupants below.

Figure 1. Earthquake-damaged book shelves (EERI photo).

Figure 2. Cladding damage resulting from 1995 Kobe earthquake (C. Rojahn photo).

Anchorage of Nonstructural Components

The anchorage or bracing methods used to resist earthquake forces must be carefully considered if they are to be truly effective. Not only must the correct seismic loads be calculated to determine the size and amount of bracing or anchorage, but the compatibility of the anchorage with the functional characteristics of the component being braced or anchored must also be considered. The layout and location of bracing or anchorage must be carefully chosen to provide adequate clearance, particularly in above-ceiling spaces or other areas where the ability to maintain or service equipment or systems is necessary. It may also be necessary to reserve enough access space for the servicing of other components. Lastly, the specific type of anchorage fasteners to be used must be compatible with the structural member or substrate into which the anchorage will be placed. Please also refer to the companion Briefing Paper 6 titled, "Seismic Code Requirements for Anchorage of Nonstructural Components," for a more detailed explanation of the 1997 *Uniform Building Code* (UBC) anchorage requirements.

The 1997 UBC requires that anchors with embedment depths less than eight times the anchor diameter must be designed to resist twice the normally computed seismic forces.

Anchorage Methods and Limitations

Flexible anchorage is needed whenever the component requires some freedom of motion to perform its intended function. Examples include those components subjected to large thermal expansion and contraction cycles and those requiring vibration isolation. Flexible connections are also needed when piping, conduits, or ducts cross a seismic separation gap in a structure or pass between two adjacent separate structures.

The capacity of anchorage into concrete and masonry is always sensitive to the depth and spacing of the embedded anchors and to their location relative to the nearest edge of the concrete or masonry. If the available depth is shallow, the minimum design force that the anchor must resist has to be increased. In fact, the 1997 UBC requires that anchors with embedment depths less than eight times the anchor diameter must be designed to resist twice the normally computed seismic forces. This applies to expansion anchors, chemical anchors, and cast-in-place bolts. This is in addition to the capacity reductions that may apply due to a reduced distance between the anchor and an edge or end of the concrete or masonry. The allowable pull-out or tension capacity of certain anchors may depend on whether or not special inspection and testing of the anchors is to be provided during their installation. Multiple anchors must be spaced apart a minimum distance that is based on the diameter of the anchor used, with expansion anchors typically requiring larger minimum distances than

Figure 3. Collapse of heavy plaster ceiling during 1994 Northridge earthquake (EERI photo).

withdrawal values in the standard were not based on cyclic loading.

If anchorage is accomplished using nonductile materials or adhesives, the 1997 UBC requires minimum design forces that are three times larger than those used with ductile anchorage materials. This requirement compensates for the fact that nonductile materials can fail suddenly and completely, resulting in potentially dangerous falling hazards.

chemical anchors. The anchor manufacturer's product evaluation report should always be consulted to obtain the correct allowable capacity as a function of spacing. The minimum spacing permitted generally provides lower capacity than the standard spacing. The reports also specify if the product is not suitable for earthquake loading or for anchoring equipment subject to vibration. The reports on chemical anchors should also note whether they are sensitive to high temperatures.

Anchors connecting to wood must be properly designed to account for the angle at which the forces act compared to the grain direction of the wood member into which the nail, bolt or screw is connected. When the load is applied in a direction other than parallel to the grain, the anchor capacity must be reduced based on the angle between the load direction and the parallel-to-grain direction of the member. Wood member end and edge distances must also be maintained. If nails are placed so that they are resisting forces along their length (subjected to withdrawal), they should not be considered reliable for resisting earthquake forces, even though they may have a withdrawal capacity published in the National Design Standard. This is because the

References

ICBO, 1997, *Uniform Building Code*, International Conf. of Building Officials, Whittier, Calif.

Resources for Additional Reading

ATC, 1998, *Proc. of Seminar on Seismic Design, Retrofit, and Performance of Nonstructural Components*, Applied Technology Council, Report ATC 29-1, Redwood City, CA.

About this Briefing Paper Series

Briefing papers in this series are concise, easy-to-read summary overviews of important issues and topics that facilitate the improvement of earthquake-resistant building design and construction quality.

This briefing paper was prepared by the ATC/SEAOC Joint Venture, a partnership of the Applied Technology Council (ATC) and the Structural Engineers Association of California (SEAOC). Funding for the series was provided by the California Seismic Safety Commission, Proposition 122 Retrofit Practices Improvement Program.

Copies of Briefing Papers can be downloaded from ATC's World Wide Web site (www.atcouncil.org), or are available from:

ATC/SEAOC Joint Venture
c/o Applied Technology Council
555 Twin Dolphin Drive, Suite 550
Redwood City, California 94065

Briefing Paper 5

Seismic Response of Nonstructural Components

Part B: Proper Anchorage of Ceilings, Interior Walls, Glazing, and Parapets

Introduction

This Briefing Paper 5, *Seismic Response of Nonstructural Components*, consists of three parts that discuss how earthquakes affect a variety of nonstructural building components, and how they should be anchored or braced to resist seismic forces. Part A defines the types of systems and equipment that can be affected, describes the way they respond to earthquake motions, and discusses various anchorage systems and their limitations. This Part B describes the vulnerability and proper retrofit anchorage methods for suspended ceilings, interior gypsum walls, partitions, glazing, window walls, parapets and nonstructural masonry walls. Part C describes the vulnerability and proper retrofit anchorage for other nonstructural components types: cladding and veneers, floor- or roof-mounted equipment, and suspended equipment, ducts, pipes and light fixtures.

Suspended Ceilings

Typical ceilings in modern buildings are comprised of a metal grid suspended from the structure above with lay-in acoustical panels. In an earthquake, the metal grid easily moves horizontally if it is not adequately braced. This lateral movement causes the ceiling to buckle where the movement is suddenly restrained by adjoining walls or columns. Where buckling occurs, metal-grid-mounted objects such as light fixtures, HVAC diffusers, exit signs, and ceiling panels may fall on occupants and furnishings below (Figure 1). Some buildings will contain suspended ceilings of gypsum board or gypsum lath and plaster. Bracing in such ceilings is

Figure 1. Earthquake-damaged suspended ceiling. EERI photo..

usually provided by light-gauge metal bracing of the main runners that carry the ceiling finish. Older installations may not have any bracing because the typical T-bar ceiling bracing is not present. Ceilings in much older buildings tend to be plaster on a wood lath backing and are very rigid and much heavier than modern lay-in tile ceilings. Bracing these ceilings requires a careful evaluation of their current restraint conditions and vertical support. An important retrofit consideration with rigid ceilings is to provide sufficient clearance from the bounding wall lines to prevent pounding damage between the ceiling and the walls.

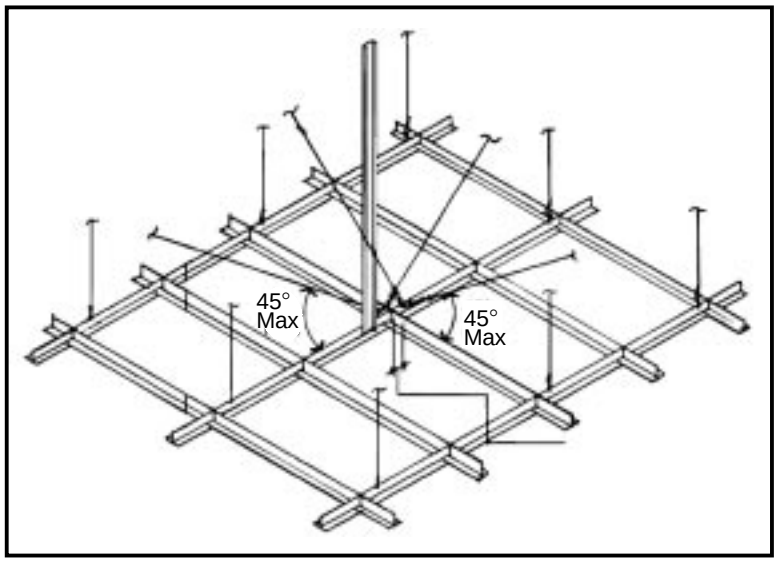

Figure 2. Elements of properly braced ceilings.

Typical methods to prevent suspended ceiling damage are:

- Install bracing wires inclined at 45 degrees to brace the ceiling grid horizontally as in Figure 2.
- Install vertical compression posts to brace the ceiling grid vertically as in Figure 2.
- Provide separate vertical suspension wires for heavy ceiling-mounted objects.
- Provide separation space between the ceiling and other less flexible elements that either penetrate the ceiling or form a stiff boundary along ceiling edges.
- Provide separation joints between portions of the building that may move differentially

Ceiling-height partitions are especially vulnerable when they are used to support heavy objects such as book cases mounted to the wall .

Interior Gypsum-Board Walls and Partitions

All interior walls and partitions must be anchored at their top and bottom to resist earthquake forces that will tend to push them over. Power-driven fasteners are typically used to connect a light-gauge metal bottom track to a concrete floor and can also be used at the top track when the next structural framing level above consists of metal deck with concrete fill, or a concrete slab. Sheet metal screws are typically used to connect metal top and bottom tracks to wood-framed floors or wood-framed roof construction. Wood-framed partitions need similar attachments using nails.

Ceiling-height partitions are especially vulnerable when they are used to support heavy objects such as book cases mounted to the wall and when the partitions are not connected to other walls in the perpendicular direction. Ceiling-height walls should not be assumed to be properly braced if their top track is connected directly to a T-bar suspended ceiling runner, because most suspended ceiling systems are not designed for this additional lateral load. Relying on perpendicular walls to provide sufficient bracing requires that the walls providing bracing be spaced at sufficiently close intervals to prevent excessive deflection of the wall being braced.

Typical methods to prevent partition damage are:

- Extend the wall studs from the floor to the structure (floor or roof) above and connect both the top and bottom tracks (or sill plate and top plate) to the floor and the structure above.

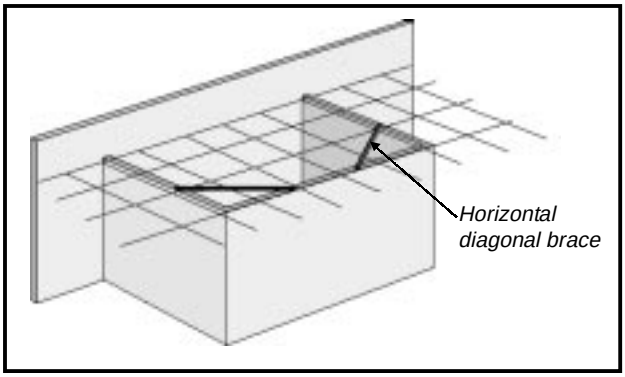

Figure 3. Partition braced by cross walls.

- Brace the top of ceiling-height partition walls to the structure above with kicker studs installed at 45 degrees in alternating directions at four-foot intervals. Connect bottom track or sill to floor, the kicker to the top track or plate, and the kicker stud to the structure above.
- Brace partition walls to perpendicular walls with braces located in the plane of the top track or plate of the wall (see Figure 3). The braces should form 45-degree angles with the walls. Connect the bottom track or sill to the floor, connect the brace to top track or plate of each wall, and connect a stud of the perpendicular wall to a stud in the partition being braced.

Glazing and Window Walls

Exterior window walls can be very large in modern buildings, and floor-to-ceiling glazing is also fairly common inside office areas. Cuts from broken glass are the most common type of earthquake injury. Glass breakage is typically caused by the deflection of the structure beyond the capacity of the window wall system or frame. Severe injuries can result outside of buildings particularly where window walls are located high above pedestrian areas and building exits.

Typical methods to prevent glass breakage or reduce risk are:

- Use laminated or tempered glass to reduce the size of the broken glass pieces.
- Use a glazing or frame system that allows for greater deflection.

Parapets and Nonstructural Masonry Walls

Unbraced parapets, particularly those constructed of unreinforced masonry are very susceptible to collapse in even small earthquakes. An example is shown in Figure 4. Wood-framed parapets, especially those that are very tall or that have heavy ornamentation or projecting cornices, can also fall due to the large drifts and accelerations that occur at roof level.

Glass masonry walls and hollow clay tile walls are sometimes used as interior nonstructural walls. These materials provide desirable appearance and fire-resistant characteristics. However, because of their mass, they are vulnerable in

Figure 4. Failed parapet. EERI photo..

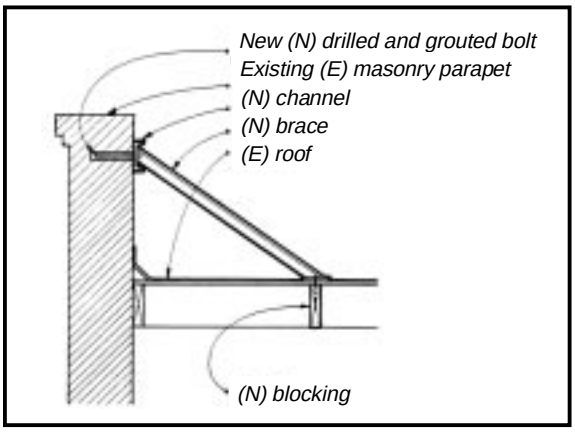

Figure 5. Strengthening of parapet with steel braces.

earthquakes if not properly reinforced or braced. In older buildings, nonstructural masonry elements are especially vulnerable to failure in the out-of-plane direction. The falling hazard these elements pose can lead to serious injury or loss of life.

Nonstructural masonry walls are also commonly used in older concrete frame buildings as infill between the perimeter-frame beams and columns. These infill walls are susceptible to out-of-plane failure. Under lateral loads they can crack and dislodge individual pieces of masonry. When these infill walls contain openings or extend only a portion of the story height, they can cause serious damage to adjacent columns. The infill causes this damage by bracing the columns at locations where the building's original design did not anticipate such stresses. In these cases, it is prudent to provide a separation between the infill masonry and the adjacent column, although this does complicate the task of providing adequate out-of-plane bracing of the masonry infill.

Typical methods to prevent parapet and nonstructural masonry wall damage are:

- Brace slender parapets to the roof structure (Figure 5).
- Add reinforcement or overlays to improve the resistance to in-plane forces.
- Brace for out-of-plane forces on nonstructural interior masonry and hollow tile partitions.
- Provide out-of-plane bracing of exterior masonry infill walls and provide a separation between the masonry and adjacent concrete columns.

About this Briefing Paper Series

Briefing papers in this series are concise, easy-to-read summary overviews of important issues and topics that facilitate the improvement of earthquake-resistant building design and construction quality.

This briefing paper was prepared by the ATC/SEAOC Joint Venture, a partnership of the Applied Technology Council (ATC) and the Structural Engineers Association of California (SEAOC). Funding for the series was provided by the California Seismic Safety Commission, Proposition 122 Retrofit Practices Improvement Program.

Copies of Briefing Papers can be downloaded from ATC's World Wide Web site (www.atcouncil.org), or are available from:

ATC/SEAOC Joint Venture
c/o Applied Technology Council
555 Twin Dolphin Drive, Suite 550
Redwood City, California 94065

Briefing Paper 5

Seismic Response of Nonstructural Components

Part C: Proper Anchorage of Cladding and Equipment

Introduction

This Briefing Paper 5, *Seismic Response of Nonstructural Components*, consists of three parts that discuss how earthquakes affect a variety of nonstructural building components, and how they should be anchored or braced to resist seismic forces. Part A defines the types of systems and equipment that can be affected, describes the way they respond to earthquake motions, and discusses various anchorage systems and their limitations. Part B describes the vulnerability and proper retrofit anchorage methods for suspended ceilings, interior gypsum walls, partitions, glazing, window walls, parapets and nonstructural masonry walls. This Part C describes the vulnerability and proper retrofit anchorage for other nonstructural components types: cladding and veneers, floor-or roof-mounted equipment, and suspended equipment, ducts, pipes and light fixtures.

Cladding and Veneers

Exterior cladding comes in many forms. Precast concrete panels are used extensively on modern buildings to provide a durable exterior weathering surface with excellent fire resistance. However, these panels are very heavy and require specially detailed connections to support the vertical loads. There must also be sufficient anchorage to resist lateral out-of-plane loads. They must also have connections designed to accommodate thermal, wind and seismic in-plane lateral movements of the structural elements to which they are attached (see Figure 1). The design, fabrication, and installation of precast panels and their anchorage is usually performed by a specialty contractor. The design must take into account the story drift criteria that were used by the designer of the building's structural system.

Lighter exterior cladding such as GFRC panels, prefabricated foam plastic core insulating panels with metal facings (EIFS), and aluminum or stainless steel sheets are in common use and rely on mechanical anchorage for their attachment and bracing. The attachments are usually designed by the installation contractor and must accommodate drift. However the backing (often a light-gauge metal stud wall) used to support these systems is usually not a part of the cladding subcontractor's work. This wall framing must also be designed to resist both the in-plane and out-of-plane lateral forces the cladding exerts, and to transmit those loads into the main structural system of the building.

Veneers fall into two general classifications: adhered and anchored. Thin veneer elements such as tiles or thin brick, terra cotta, or stone facings are often adhered to a solid substrate material, which is in turn attached to the building's exterior structural wall framing with fasteners. The fasteners must be appropriately sized and spaced to provide effective anchorage, and the substrate and adhesive material must be properly prepared and applied. Anchored veneers involve thicker units of brick or stone masonry and are usually anchored to a structural wall using a combination of metal pins, metal

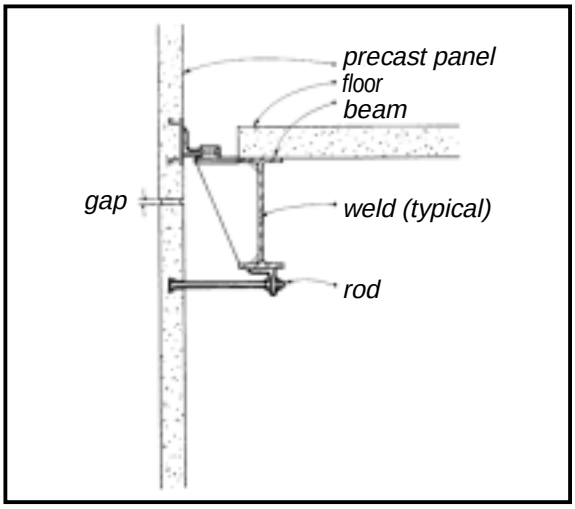

Figure 1. Typical connection for precast concrete units.

tabs, wire, screws, or proprietary mechanical fasteners.

These cladding and veneer elements are vulnerable in an earthquake when certain conditions are present.

- Joints in the cladding may not be large enough to allow for in-plane drift. In-plane movements can cause cracking of the veneer material, failure of attachments, or both.
- Anchorage or adhesion of the elements may be inadequately designed because the original standard attachments may not have been designed for earthquake forces.
- Because these elements are located on the exterior, exposure to water can deteriorate any concealed attachments. This deterioration is not easily detected.

Typical methods to prevent cladding and veneer damage are:

- Provide cladding joints with adequate gaps between individual pieces.
- Provide connections that accommodate drift.

To evaluate cladding and veneer fasteners, expose a sample of concealed anchors to examine their current condition and the quality of the original installation. Retrofit with supplemental anchors as necessary. Test adhered veneer at sample locations to determine its current condition and strength. Remove and reattach deteriorated areas.

Floor-Mounted or Roof-Mounted Equipment

Various pieces of equipment in a building, primarily electrical and mechanical equipment, machinery, and fluid-filled tanks are mounted on the floor or roof (see example in Figure 2).

These components are normally heavy and sometimes large in size. Several conditions can increase the seismic vulnerability of this equipment.

- If not properly restrained, equipment, machinery, and fluid tanks will tend to slide. Massive objects in motion during earthquakes can cause injuries and damage adjacent objects. The motion can also damage connected piping, ductwork, and electrical conduits, which in turn may lead to other serious damage caused by fires, hazardous fluid spills, and water leaks.
- Equipment mounted on vibration isolators is particularly vulnerable, because the isolators permit resonance during earthquake motions making equipment more difficult to restrain.
- Tall, slender objects with a high center of gravity can fall over if not adequately anchored.

Typical methods to prevent damage to floor-mounted or roof-mounted equipment are:

- Anchor equipment to the structure to resist sliding and overturning forces, as shown in Figure 3.
- Provide seismic snubbers for equipment mounted on vibration isolators.

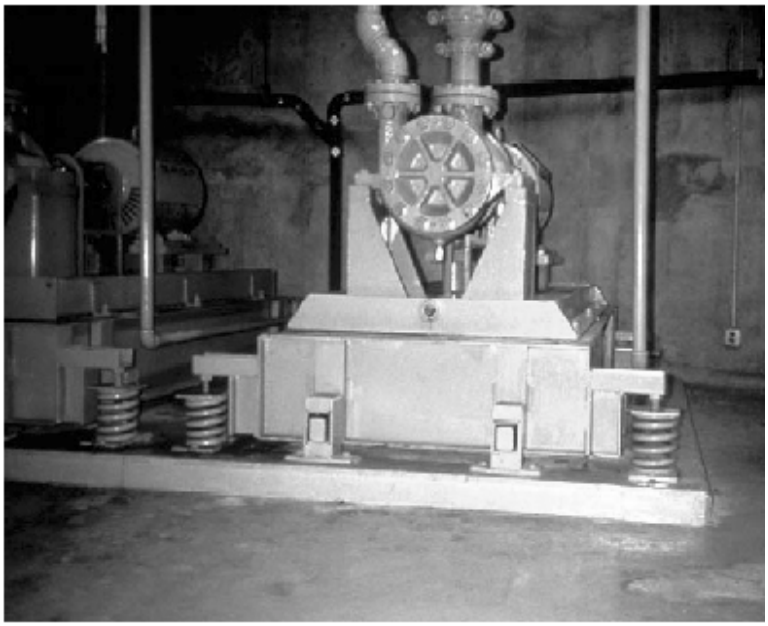

Figure 2. Mechanical equipment with snubbers.

- Provide flexible piping, conduit, and connections for utility hook-ups that can accommodate all anticipated movement.

Suspended Equipment, Ducts, Pipes, and Light Fixtures

Suspended equipment, conduits, ducts, and pipes that are hung from the structure tend to be less massive than floor-mounted equipment. However, the mass of hung objects can be greater than expected. For example, an eight-inch diameter fire sprinkler main filled with water will be much heavier than the weight of the piping alone. Suspended light fixtures, which are comparatively light, can cause serious injury when they fall. Vertical hangers alone cannot adequately restrain these components. All of these suspended components need to be braced for movement in both horizontal directions, and the vertical hangers must increase resistance to upward movement.

These components are vulnerable when the following conditions are present.

- Bracing is inadequate to prevent the component from swinging.
- Inadequate clearance from other more stationary objects results in pounding damage. Pounding damage may in turn cause fire and water damage.
- Insufficient provisions for differential movement between two separate buildings or between structurally separated parts of a building.

Typical methods to prevent suspended equipment damage are:

- Provide bracing in both horizontal directions and appropriate hangers to prevent upward motion due to swinging (see Figure 4).
- Provide an adequate gap to prevent pounding against adjacent components or surfaces. This is particularly important where pipes pass through walls and floors.
- Provide flexible joints where pipes and ducts connect separate structures.

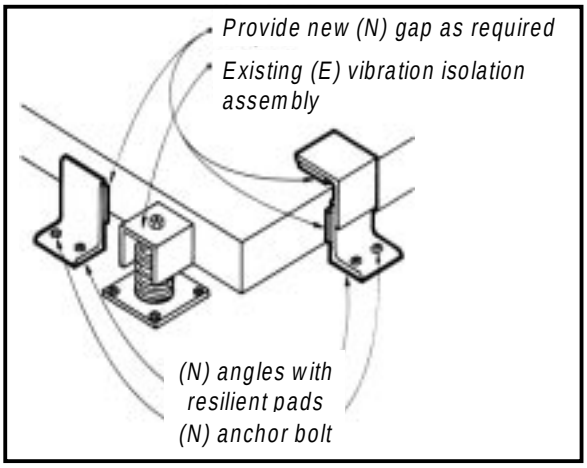

Figure 3. Seismic restraint added to existing equipment.

Resources for Additional Reading

ATC, 1998, *Proceedings of Seminar on Seismic Design, Retrofit, and Performance of Nonstructural Components*, Applied Technology Council, Report ATC 29-1, Redwood City, California.

BAREPP, 1985, *Reducing The Risk of Nonstructural Earthquake Damage: A Practical Guide*. Bay Area Regional Earthquake Preparedness Project, Second Edition, Report BAREPP 85-10, Oakland, California.

CSSC, 1995, *Turning Loss to Gain*, Chapter III, California Seismic Safety Commission, SSC Report No. 95-01, Sacramento, California.

Hall, J.F. (editor), 1995, Northridge Earthquake

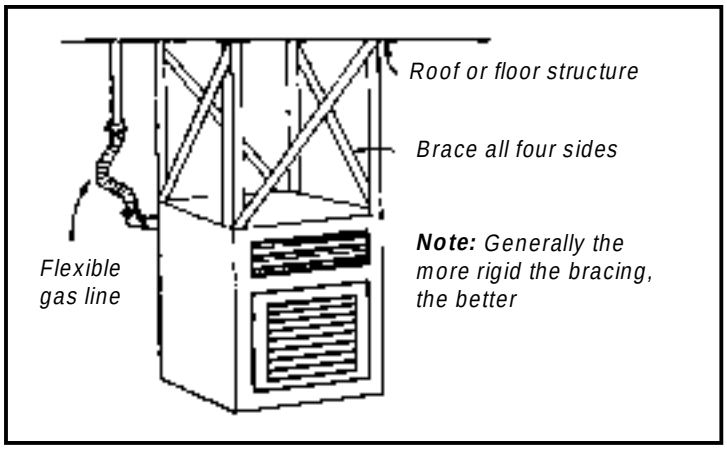

Figure 4. A roof-hung mechanical unit with seismic bracing and flexible connection.

Reconnaissance Report, *Earthquake Spectra*, Supplement C to Volume 11, Earthquake Engineering Research Institute, Oakland, California.

Behr, Richard A., 1996, Seismic Test Methods for Architectural Glazing Systems. *Earthquake Spectra*, Volume 12, No. 1, Earthquake Engineering Research Institute, Oakland, California.

Lagorio, H.J., 1990, *Earthquakes: An Architect's guide to Nonstructural Hazards*. John Wiley & Sons, Inc.

NIST, 1996, *State of the Art Report on Seismic Design Requirements for Nonstructural Building Components*, National Institute of Standards and Technology, Report NISTIR 5857, Gaithersburg, Maryland.

Soong, T.T., Chen, G., Wu, Z., Zhang, R.H., and Grigoriu, M., 1996, *Assessment of the 1991 NEHRP Provisions for Nonstruct and Recommended Revisions*, Multidisciplinary Center for Earthquake Engineering Research, Technical Report NCEER-93-0003, State Univeristy of New York at Buffalo.

About this Briefing Paper Series

Briefing papers in this series are concise, easy-to-read summary overviews of important issues and topics that facilitate the improvement of earthquake-resistant building design and construction quality.

This briefing paper was prepared by the ATC/SEAOC Joint Venture, a partnership of the Applied Technology Council (ATC) and the Structural Engineers Association of California (SEAOC). Funding for the series was provided by the California Seismic Safety Commission, Proposition 122 Retrofit Practices Improvement Program.

Copies of Briefing Papers can be downloaded from ATC's World Wide Web site (www.atcouncil.org), or are available from:

ATC/SEAOC Joint Venture
c/o Applied Technology Council
555 Twin Dolphin Drive, Suite 550
Redwood City, California 94065

Briefing Paper 6

Seismic Code Requirements for Anchorage of Nonstructural Components

Part A: Performance Implications of Evolving Codes

Introduction

Briefing Paper 6, *Seismic Code Requirements for Anchorage of Nonstructural Components*, consists of two parts. This Part A provides a brief history of how earthquake-resisting provisions of the *Uniform Building Code* (UBC) have evolved and relates those changes to the expected seismic performance of nonstructural building components in older buildings. Part B describes current trends in the codes for anchorage of nonstructural components and provides design examples based on the 1997 UBC provisions.

With an understanding of building code changes over the years, it is possible to develop a general sense of the earthquake resistance of existing buildings designed and constructed with such codes. This understanding is particularly useful for the evaluation of nonstructural components and systems, which can be easily upgraded through retrofits.

An understanding of building code changes over the years is particularly useful for the evaluation of nonstructural components and systems.

The UBC, which was first published in 1927 and is updated every three years by the International Conference of Building Officials (ICBO), contains provisions that pertain to the seismic design of both structural components and nonstructural components. The UBC is a key element in the mitigation of nonstructural component seismic hazards because it already provides the basis for the seismic requirements of local-jurisdictions for new building design in California and other seismically active states, particularly in the western United States.

Requirements for seismic retrofit (as opposed to new design) have not yet been standardized, but are expected to follow generally the requirements for seismic design of new buildings. For example, the recently completed FEMA-funded *NEHRP Guidelines for the Seismic Rehabilitation of Buildings*, which were developed for use on a voluntary basis and are expected to be used widely over the next several decades, have adopted requirements for nonstructural components similar to those in the 1997 UBC.

While the UBC contains numerous provisions that govern the seismic performance of buildings, this Part A historical perspective is limited to those parameters that have the greatest influence on the performance of nonstructural components: (1) seismic base shear; (2) nonstructural component seismic force factor; (3) inter-story drift; (4) requirements for cladding connections; and (5) requirements for building separation.

The sections that follow include figures that show the evolution of UBC requirements from 1927 through 1994. The 1997 UBC, not plotted in the figures, incorporated a significant change from a working stress design to a strength design basis. Calibration of the recast equations confirm that final designs using the 1994 and 1997 UBC remain essentially the same. See Briefing Paper 6, Part B, for more information.

Evolution of Base Shear Requirements

The base shear requirements in the various editions of the UBC effectively dictate how much seismic strength a structure must have as a whole. This parameter is important because buildings designed for a relatively low horizontal base shear may sustain significant damage to the building structural system when severe earthquake ground motion occurs. Partial structural collapse or permanent deformation, should it occur, is likely to cause damage to the building nonstructural components. A horizontal base shear requirement expressed as a percent of gravity and related to building mass was intro-

duced in the first (1927) edition of the UBC. Significant changes in base shear requirement occurred in the 1946, 1961 and 1976 editions of the UBC (see Figure 1), including the introduction of an importance factor, I_p, which specifies higher force levels for important buildings, such as hospitals and emergency response facilities. The increases in the base shear requirement were accompanied by the introduction of other detailed seismic provisions in 1976 and 1988.

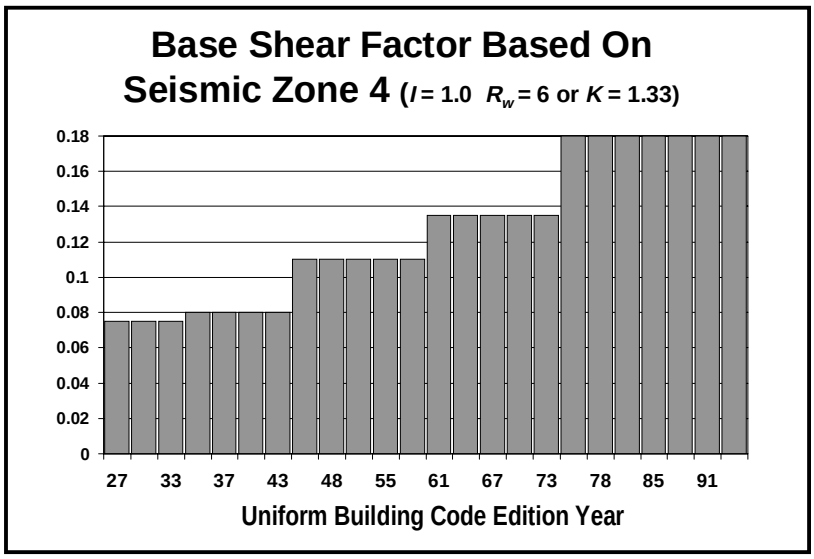

Figure 1. Changes in UBC seismic base shear requirements for shear-wall buildings in seismic zone 4 (highest zone) with an Importance Factor of 1.0.

Evolution of Seismic Force Requirement for Nonstructural Building Components

The seismic force factor for nonstructural and structural components in the UBC (e.g., f_p in the 1994 edition) governs the seismic strength of nonstructural building components. The purpose of the factor is to reduce the risk of nonstructural component failure (that is, the architectural, mechanical, and electrical components). Examples of components that are designed in accordance with this factor are chimneys, parapets, exterior cladding, partitions, ceilings, light fixtures, ornamentation, boilers, fans, elevators, and sprinkler systems.

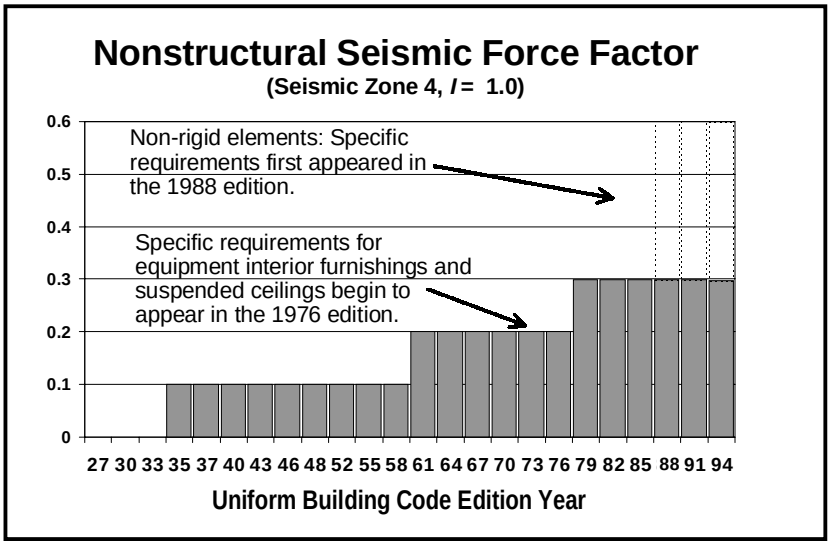

Figure 2. Changes in UBC seismic force factor for buildings in seismic zone 4 with an Importance Factor of 1.0.

Figure 2 shows how the seismic force factor has increased since its introduction. The requirements in the early editions were not specific; nonstructural components generally did not receive the full attention of design and construction professionals until the 1970s. Changes in the 1979 edition of the UBC signify an important upgrade of the seismic design code. The 50-percent increase in the force requirement was essentially an implicit acknowledgment that the designs under previous editions may have been seriously inadequate. Similar changes relating to "non-rigid elements" occurred in the 1988 edition. This change resulted from a greater understanding of an earthquake's dynamic effects on flexible or flexibly mounted nonstructural components.

Evolution of Drift Requirements

The primary objective of the interstory drift requirement (e.g., Section 1628.8 in the 1994 UBC) is to limit structural instability due to the P-delta effect that occurs with large lateral deflection. Drift or lateral movement under earthquake loading is also correlated strongly with nonstructural component damage. The greater the drift, the greater the likelihood of nonstructural damage during an earthquake. Because nonstructural components in older

buildings (including cladding, windows, doors, and interior wall finishes) are often not designed to accommodate the extent of structural movement that is possible in older buildings, they may experience severe damage. Figure 3 illustrates the history of this requirement. Although the importance of drift was known for many years, specific requirements in the UBC were not introduced until 1976. Older flexible buildings have a greater likelihood of nonstructural damage due to the absence of limits for seismic movement of the structural system.

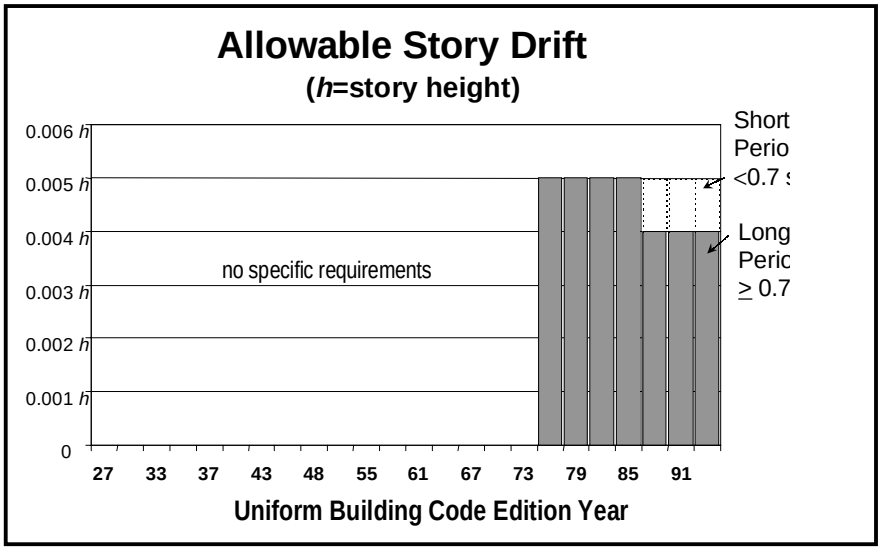

Figure 3. Changes in UBC interstory drift requirements.

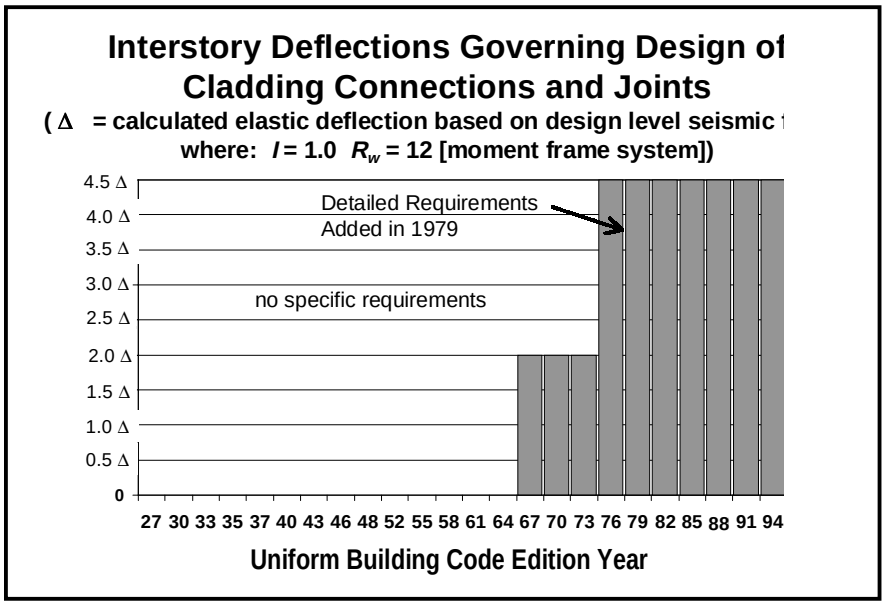

Figure 4. Changes in UBC exterior element deflection limitsfor moment frame buildings with an Importance factor of 1.0.

Evolution of Deformation Requirements

Recognizing that structures will deform under earthquake loading, this UBC requirement (e.g., Section 1631.2.4 of the 1994 UBC) reduces damage to nonstructural components by requiring them to accommodate movement. From an economic loss perspective, this requirement probably has the greatest impact on the design of exterior cladding. The cost of exterior cladding is an important building cost. Damage to a building envelope or its weatherproofing can also lead to losses from water infiltration. Figure 4 shows the introduction of this requirement in 1967, with a major change in 1976. Buildings constructed before the 1967 UBC may be at higher risk for cladding damage.

Evolution of Building Separation Requirements

This provision requires buildings to be separated to reduce pounding damage during earthquakes (e.g., Section 1631.2.11 in the 1994 UBC). As early as 1952, the UBC included a nonspecific requirement to provide building separation. From the 1961 to 1985 editions, structures were required to provide separation "to avoid contact under deflection from seismic action." A professional guideline recommended that a separation of $3/K$ times the calculated deflection be provided, where K was a horizontal force factor used in calculating design base shear. The 1988 UBC integrated this guideline by requiring the separation to be to $3(R_w / 8)$, here R_w was a structural response modification factor approximately equal to $8/K$. In effect, the requirement specified the separation to be three times the design deformation.

Because the earlier requirements were not specific, buildings built under pre-1988 editions of the UBC may still be subject to pounding damage to both structural and nonstructural systems.

General Conclusions

For nonstructural components in most ordinary buildings, there appears to be a period of greatly increased designer concern for seismic detailing starting in about 1976. Seismic detailing appears to improve dramatically until about 1990. After that, improvements in seismic design have been more incremental.

References

ATC, 1995, *Structural Response Modification Factors*, Applied Technology Council, ATC-19 Report, Redwood City, California.

ATC, 1995, *A Critical Review of Current Approaches to Earthquake Resistant Design*, Applied Technology Council, ATC-34 Report, Redwood City, California.

ATC, 1997, *NEHRP Guidelines for the Seismic Rehabilitation of Buildings* and *Commentary*, prepared by the Applied Technology Council for the Building Seismic Safety Council, published by the Federal Emergency Management Agency, Fema 273 and 274 Reports, Washington, DC,

BSSC, various editions, 1991, 1994, 1997, *NEHRP Recommended Provisions for the Development of Seismic Regulations for New Buildings*, prepared by the Building Seismic Safety Council, published by the Federal Earthquake Management Agency, FEMA 222, 222A, 302 Reports, Washington, DC.

ICBO, various editions, 1927-1997, *Uniform Building Code*, International Conference of Building Officials, Whittier, California.

SEAOC, 1990, 1996, and other editions, *Recommended Lateral Force Requirements and Commentary*, Structural Engineers Association of California, Sacramento, California.

Resources for Additional Reading

ASCE, 1996, *Minimum Design Loads for Buildings and Other Structures*, American Society of Civil Engineers, ASCE 7-95, Reston, Virginia.

Drake, R. M. and R. E. Bachman, 1994, "1994 NEHRP Provisions for Architectural, Mechanical, and Electrical Components," *Proceedings, 5th United States National Conference on Earthquake Engineering*, Earthquake Engineering Research Institute, Oakland, California.

Drake, R. M. and R. E. Bachman, 1995, "Interpretation of Instrumented Building Seismic Data and Implications for Building Codes," *Proceedings of 1995 SEAOC Annual Convention*, Structural Engineers Association of California, Sacramento, California.

Drake, R. M. and R. E. Bachman, 1996, "NEHRP Provisions for 1994 for Nonstructural Components," *ASCE Journal of Architectural Engineering*, American Society of Civil Engineers, Reston, Virginia.

Soong, T.T., Chen, G., Wu, Z., Zhang, R.H., and Grigoriu, M., 1996, *Assessment of the 1991 NEHRP Provisions for Nonstructural Components and Recommended Revisions*, National Center for Earthquake Engineering Research, Technical Report NCEER-93-0003, SUNY, Buffalo, New York.

Wong, K. M., 1994, "High Seismic Economic Risk Buildings: Recognizing a Potential Problem," *Earthquake Spectra*, Vol. 10, No. 1, Earthquake Engineering Research Institute, Oakland, California.

About this Briefing Paper Series

Briefing papers in this series are concise, easy-to-read summary overviews of important issues and topics that facilitate the improvement of earthquake-resistant building design and construction quality.

This briefing paper was prepared by the ATC/SEAOC Joint Venture, a partnership of the Applied Technology Council (ATC) and the Structural Engineers Association of California (SEAOC). Funding for the series was provided by the California Seismic Safety Commission, Proposition 122 Retrofit Practices Improvement Program.

Copies of Briefing Papers can be downloaded from ATC's World Wide Web site (www.atcouncil.org), or are available from:

ATC/SEAOC Joint Venture
c/o Applied Technology Council
555 Twin Dolphin Drive, Suite 550
Redwood City, California 94065

Briefing Paper 6

Seismic Code Requirements for Anchorage of Nonstructural Components

Part B: Design Example Using Current UBC Requirements

Introduction

Briefing Paper 6, *Seismic Code Requirements for Anchorage of Nonstructural Components*, consists of two parts. Part A provides a brief history of how earthquake-resisting provisions of the *Uniform Building Code* (UBC) have evolved and relates those changes to the expected seismic performance of nonstructural building components in older buildings. This Part B compares the 1994 *Uniform Building Code* requirements with those contained in the 1997 UBC, and provides design examples based on the 1997 UBC provisions.

Current building codes and standards require site-specific considerations and yield larger forces when the building is founded on softer soils or near faults.

Recent Developments in Seismic Codes for Nonstructural Components

As summarized in Part A of this Briefing Paper, the seismic requirements for anchorage of nonstructural building components in the *Uniform Building Code* have been incrementally increasing since their introduction in 1927. The seismic provisions in the 1994 and earlier editions of the UBC were based on allowable stress design. In 1997, the UBC seismic provisions were revised from an allowable stress design basis to a strength design basis. The change occurred because the UBC adopted the requirements specified in the FEMA-funded National Earthquake Hazards Reduction Program (NEHRP) *Recommended Provisions for the Development of Seismic Regulations for New Buildings* (hereinafter called *NEHRP Recommended Provisions for New Buildings)*, which had been developed on a strength design basis. As a result, engineers and architects who were familiar with the design earthquake forces found in earlier editions of the UBC were required to determine design earthquake forces on a strength basis.

In addition, the determination of earthquake design forces in the 1997 UBC and other recent model building codes and standards have become more complicated. The 1997 UBC, the 1997 *NEHRP Recommended Provisions for New Buildings*, and the 1997 *NEHRP Guidelines for the Seismic Rehabilitation of Buildings* for example, require site-specific considerations and yield larger forces when the building is founded on softer soils or near active faults. In addition, larger forces are required at higher elevations in the building, consistent with measured in-structure earthquake acceleration response. It is expected that this additional complexity will result in better and more cost-effective protection of nonstructural components.

Following is a comparison of the 1994 UBC allowable stress design and the 1997 UBC strength design provisions for anchorage of nonstructural components.

1994 UBC Allowable Stress Design Force Provisions

The seismic provisions of the 1994, and earlier, editions of the UBC were based principally on the recommendations of the Seismology Committee of the Structural Engineers Association of California (SEAOC), as summarized in the SEAOC "Blue Book". The pertinent earthquake design provisions for nonstructural components are given in the following equation:

$$F_p = ZI_pC_pW_p \qquad (1)$$

where:

F_p = Total allowable-stress design lateral seismic force on nonstructural component

Z = Seismic zone factor, tabulated, dependent on seismic zone

I_p = Seismic importance factor, tabulated, dependent on occupancy category

C_p = Horizontal force factor, tabulated, either 0.75 or 2.0, depending on the specific component, with cantilevered components having a value of 2.0

W_p = Nonstructural component weight

1997 UBC Strength Design Force Provisions

The design force provisions of the 1997 UBC are based on strength instead of allowable stress. The pertinent earthquake design provisions for nonstructural components are given in the equations below:

$$F_p = 4.0 C_a I_p W_p \qquad (2)$$

$$F_p(\text{minimum}) = 0.7 C_a I_p W_p \qquad (3)$$

$$F_p(\text{alternative}) = \frac{a_p C_a I_p}{R_p}\left(1 + 3\frac{h_x}{h_r}\right) W_p \qquad (4)$$

where:

F_p = Total strength design lateral seismic force on nonstructural component

C_a = Seismic coefficient, tabulated, dependent on the seismic zone and site-specific soil profile type

I_p = Importance factor, tabulated, dependent on occupancy category

W_p = Weight of nonstructural component

a_p = Component amplification factor, tabulated, dependent on nonstructural component flexibility, with a value of 1.0 for rigid components (or with a fundamental period of vibration equal to or less than 0.06 seconds), and a value of 2.5 for flexible components, flexibly attached.

R_p = Component Response Modification factor, tabulated, dependent on nonstructural component's energy-absorption capability, with a value of 1.0 for fasteners anchoring exterior elements and ranging from 1.5 for nonductile components like shallow anchors to a maximum of 4.0 for very ductile components like (steel) storage racks.

h_x = Height above average grade to level of nonstructural component attachment

h_r = Height above average grade to roof level

The values for a_p, C_a, and R_p are taken from the 1994 NEHRP *Recommended Provisions for New Buildings*, with some modifications. The height-above-grade factor $\left(1 + 3\frac{h_x}{h_r}\right)$, is a simplification from the 1994 *NEHRP Recommended Provisions for New Buildings*.

Design Example

The following is an example design calculation using the 1997 UBC. The example component is a package HVAC unit mounted on the roof, with and without vibration isolators (Figure 1). The building is on soil profile S_D in Seismic Zone 4 and is not in a near-source location (i.e., N_a =1.0 in Table 16-S).

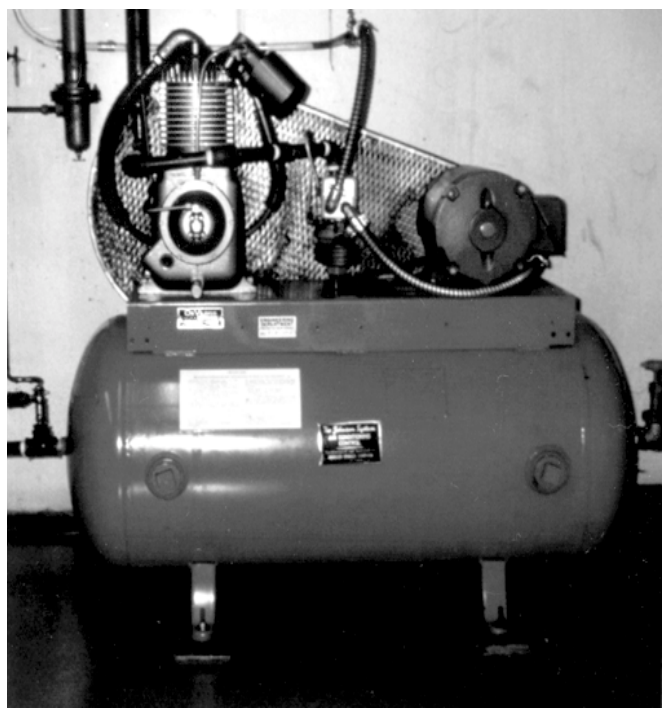

Figure 1. Example HVAC unit mounted on roof.

The 1997 UBC requires the elevation of the element, component or equipment to be specified in relationship to the base of the building. Equipment and other components located close to the roof level, and especially those located on the roof, have higher anchorage force demands than those located at lower levels. The design forces for this roof-mounted equipment are calculated for different sets of assumptions.

Case 1: Equipment Mounted on Vibration Isolators.

$h_x / h_r = 1.0$;

$I_p = 1.0$;

$a_p = 2.5$ from footnote 14 of Table 16-O;

$R_p = 1.5$ from footnote 14 of Table 16-O;

$C_a = 0.44$

$F_p = (2.5 \times 0.44 \times 1.0 / 1.5) \times (1 + 3)\ W_p$ (from equation 3 above)

$F_p = 2.933\ W_p > 4.0\ C_a$ (maximum; from equation 2 above)

$\therefore\ F_p(\text{max}) = 4.0\ C_a\ W_p = 1.76\ W_p$

Conversion to an allowable-stress design force is made by dividing the ultimate strength value by 1.4:

$F_p / 1.4 = 1.26\ W_p$.

This is 2.1 times the 1994 UBC requirement of $F_p = 0.6\ W_p$.

Case 2: Non-Isolated Equipment

For this case the equipment is not vibration-isolated and is considered a rigid component.

$h_x / h_r = 1.0$

$I_p = 1.0$,

$a_p = 1.0$ from Table 16-O

$R_p = 3.0$ from Table 16-O

$C_a = 0.44$

$F_p = (1.0 \times 0.44 \times 1.0 / 3.0) \times (1+ 3)$ (from equation 3 above)

$F_p = 0.59\ W_p$

Converting this to an allowable-stress design force: $F_p / 1.4 = 0.42\ W_p$

This is 1.4 times the 1994 UBC calculation of $F_p = 0.3\ W_p$.

Case 3: Flexible Equipment

The equipment is defined as flexible, which means its fundamental period is greater than 0.06 seconds, and is anchored at a point below its center of mass. The anchorage force then increases as follows:

$h_x / h_r = 1.0$

$I_p = 1.0$,

$a_p = 2.5$ from Table 16-O

$R_p = 3.0$ from Table 16-O

$C_a = 0.44$

$F_p = (2.5 \times 0.44 \times 1.0 / 3.0) \times (1 + 3)$ (from equation 3 above)

$F_p = 1.47\ W_p$

Converting this to an allowable stress design force: $F_p / 1.4 = 1.05\ W_p$

This is 1.75 times the $F_p = 0.6\ W_p$ for the 1994 UBC. Comparing Case 2 with Case 3, it is clear that accurately defining a component's fundamental period is essential, because it can make a drastic change in its anchorage requirement.

References

BSSC, various editions, 1991, 1994, 1997, *NEHRP Recommended Provisions for the Development of Seismic Regulations for New Buildings*, prepared by the Building Seismic Safety Council, published by the Federal Earthquake Management Agency, FEMA 222, 222A, 302 Reports, Washington, DC.

ICBO, various editions, 1927-1997, *Uniform Building Code*, International Conference of Building Officials, Whittier, California.

SEAOC, 1990, 1996, and other editions, *Recommended Lateral Force Requirements and Commentary*, Structural Engineers Association of California, Sacramento, California.

About this Briefing Paper Series

Briefing papers in this series are concise, easy-to-read summary overviews of important issues and topics that facilitate the improvement of earthquake-resistant building design and construction quality.

This briefing paper was prepared by the ATC/SEAOC Joint Venture, a partnership of the Applied Technology Council (ATC) and the Structural Engineers Association of California (SEAOC). Funding for the series was provided by the California Seismic Safety Commission, Proposition 122 Retrofit Practices Improvement Program.

Copies of Briefing Papers can be downloaded from ATC's World Wide Web site (www.atcouncil.org), or are available from:

ATC/SEAOC Joint Venture
c/o Applied Technology Council
555 Twin Dolphin Drive, Suite 550
Redwood City, California 94065

Lesson N1:
General Seismic Considerations of Nonstructural Building Components

1.1 Introduction

Adequate anchorage and bracing of nonstructural building components are extremely important topics to be understood by those responsible for writing specifications and detailing the installation of nonstructural building elements and components, and understood by those responsible for installation and inspection. Some injuries and often more than one-half of the total economic loss in earthquakes stem from or are related to damage to nonstructural components. This section contains an overview of the most vulnerable components, describes how earthquakes can damage nonstructural components, and how damage can be prevented with simple methods.

The term nonstructural building components refers to the various parts of a building that are not part of the building's structural system for carrying vertical and horizontal loads. Nonstructural building components include architectural elements such as suspended ceilings, partitions and cladding; mechanical elements such as HVAC ducts, equipment and associated piping; electrical elements such as lights and switchgear; fire sprinklers; and other integral parts of the complete building. Building components refer to permanent built-in items and excludes building contents and furniture which are typically movable. Seismic performance of building contents such as furniture and stored goods is also an important topic but is not covered in this curriculum.

The physical characteristics of the building components and their resulting response to earthquake motions can be extremely different. Therefore, appropriate means of preventing damage also vary. The vulnerability to damage and typical methods to prevent damage for seven categories of components are discussed below in Lesson N1.

1.2 Suspended Ceilings

Ceilings in modern buildings are typically composed of a metal grid, suspended from the structure above, containing lay-in acoustical panels. In an earthquake, the metal grid easily moves horizontally if it is not adequately braced, as in Figure N1-1. This lateral movement causes the ceiling to buckle where the movement is suddenly restrained by adjoining walls or columns. Where buckling occurs, metal-grid-mounted objects such as light fixtures, HVAC diffusers, exit signs, and ceiling panels may

Figure N1-1 Suspended ceiling damage

fall on occupants and furnishings below.

Typical methods to prevent suspended ceiling damage are:

- Install bracing wires inclined at 45 degrees to brace the ceiling grid horizontally, as in Figure N1-2.
- Install compression posts to brace the ceiling grid vertically.
- Provide separate vertical suspension wires for heavy ceiling-mounted objects.
- Provide separation space between the ceiling and other less flexible elements that either penetrate the ceiling or form a stiff boundary along ceiling edges.
- Provide separation joints between portions of buildings that may move differentially.

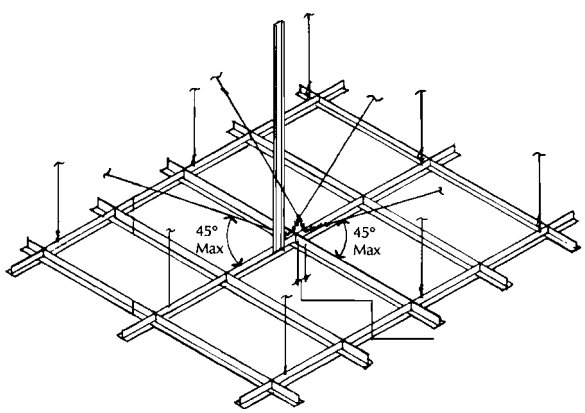

Figure N1-2 Suspended ceiling bracing

1.3 Interior Gypsum Board Walls or Partitions

All interior walls and partitions must be anchored to resist earthquake forces that will tend to push them over. Walls should be anchored to the building structure at both the top and bottom. However, interior partitions do not always extend up to the structure above. If not braced at the top, those partitions can topple over in an earthquake. See Figure N1-3. Ceiling-height partitions are especially vulnerable when they are used to support heavy objects such as book cases mounted to the wall, and where the partitions are not connected to other walls in the perpendicular direction. Ceiling-height walls should not be assumed to be properly braced if their top connection is made to a suspended ceiling, because most suspended ceiling systems are not designed for this additional lateral load. This configuration can allow the wall to fall after seriously damaging the ceiling. Relying on perpendicular walls to provide bracing requires the walls providing bracing be spaced at sufficiently close intervals to prevent excessive deflection of the wall being braced. In addition, the walls must be provided with braces properly connected to each wall's top track, and must have an adequate connection between stud framing of both walls at wall intersections.

Figure N1-3 Partition damage

Typical methods to prevent damage are:

- Brace top of partition walls with diagonal kickers to the structure above. See Figure N1-4.

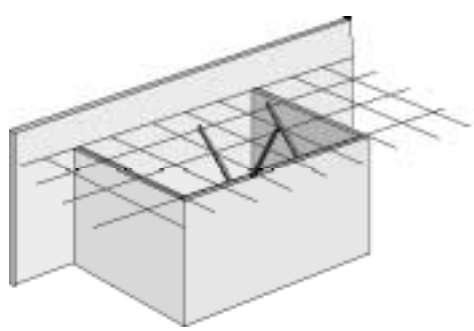

Figure N1-4 Partition wall bracing. The top ends of the 3 braces shown are attached to the structural floor

- Brace partition walls to perpendicular walls.

1.4 Glazing and Window Walls

Breakage of glass is a leading cause of injuries in earthquakes. Glass breakage is caused by the deflection of the structure and the inability of the window frame to accommodate the deflection (Figure N1-5). Severe injuries result from glass breakage, where glass is adjacent to either interior work areas or the areas outside buildings, especially when the glass is high above a pedestrian area and exit paths.

Figure N1-5 Glass pane failure

Typical methods to prevent damage or reduce risk are:

- Using laminated or tempered glass to reduce the size of the pieces of broken glass
- Applying a safety film to contain broken glass
- Using a glazing or frame system that allows for greater lateral movement.

1.5 Nonstructural Masonry Walls and Parapets

Masonry, stone, glass, or other heavy material is often used as nonstructural walls, both interior and exterior. These materials provide the weathering, acoustics, and fire-resistive characteristics that are desirable for their application. However, because of their mass, they are vulnerable in earthquakes if not properly reinforced or braced (Figure N1-6). In older buildings, nonstructural masonry elements are vulnerable, especially to failure in the out-of-plane direction. The falling hazard these elements pose can lead to serious injury and life loss.

Typical methods to prevent damage are:

- Bracing slender parapets to the roof structure.
- Adding of reinforcement or overlays to improve resistance to in-plane forces.
- Bracing for out-of-plane forces (Figure N1-7).

Figure N1-6 Failed parapet

Figure N1-7 Out-of-plane strengthening

1.6 Cladding and Veneers

Exterior cladding and veneers use a wide variety of materials and different anchorage methods. Veneers are typically thin elements that can either be adhered or mechanically anchored to the building exterior. Cladding can range from large, heavy, precast concrete elements to lightweight steel or aluminum panels. These elements are vulnerable to earthquakes in several ways (see Figure N1-8):

- Joints in the cladding may not be large enough to allow for structural deflection. Lateral movements can cause cracking of the veneer material, failure of their attachments, or both.
- Anchorage or adhesion of the elements are inadequate or deteriorated. The original attachments may not have been designed for earthquake forces, and because these elements are typically located on the exterior, water deterioration of the concealed attachments can occur that is not easily detected.

Figure N1-8 Cladding failure

Typical methods to prevent damage are:

- Provide cladding joints with adequate gaps between individual pieces.
- Retrofit anchors or attachment (see Figure N1-9).

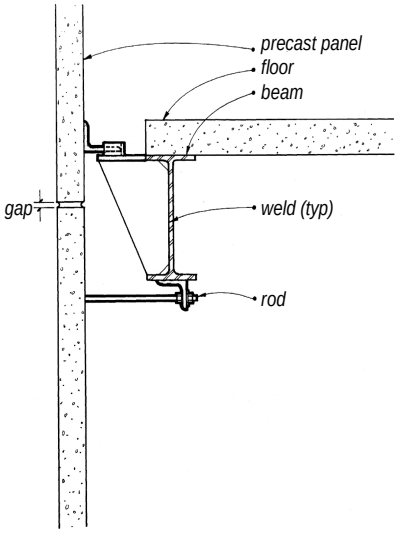

Figure N1-9 Retrofitted cladding attachments

1.7 Floor or Roof Mounted Equipment

Some nonstructural building elements, such as mechanical equipment, are floor or roof mounted. These elements are heavy and sometimes large in size. They are vulnerable in the following ways:

- Equipment will tend to slide if not properly restrained (see Figure N1-10). Massive objects in motion can cause injuries and damage to adjacent objects. Their motion can also damage piping, ductwork and electrical connections, which in turn, may lead to other damage from resulting fires or water leakage.
- Equipment mounted on vibration isolators are particularly vulnerable as they can resonate with the earthquake motion of the floor, and are more difficult to restrain.
- Tall, slender objects with high centers of gravity can easily fall over if not appropriately anchored.

Figure N1-10 Rooftop mechanical equipment fallen off supports

Typical methods to prevent damage are:

- Anchor equipment to the structure for sliding and overturning forces.
- Provide seismic snubbers for equipment mounted on vibration isolators (Figure N1-11).
- Provide flexible piping, conduit, and connections for hook-ups to accommodate anticipated movement.

Figure N1-11 Mechanical equipment with snubbers

1.8 Suspended Equipment, Ducts, Pipes, and Light Fixtures

Suspended equipment, ducts and pipes that are hung from the structure tend to be less massive than floor-mounted equipment. However, hung objects can be deceptively heavy. For example, a fire sprinkler main line filled with water will be much heavier than the piping weight alone. These elements often have:

- Inadequate bracing to prevent the component from swinging (Figure N1-12).
- Inadequate clearance to other more stationary objects resulting in pounding damage. Pounding damage may in turn cause fire and water damage.
- Insufficient provision for differential movement between two separate buildings or structurally separated parts of a building.

Figure N1-12 Pipe damage in 1971 San Fernando earthquake

Typical methods to prevent damage are:

- Provide bracing in both directions and bracing to prevent upward motion while swinging (Figure N1-13).
- Provide adequate gap to prevent pounding. This is particularly important where pipes pass through walls.
- Provide flexible joints where pipes and ducts connect separate structures.

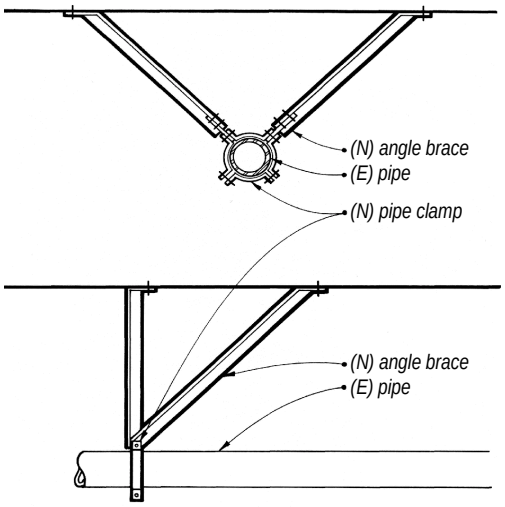

Figure N1-13 Angle bracing for pipe

1.9 Summary

This section has provided an overview of the seismic performance of nonstructural building components. Damage related to and caused by their failure continues to be a major seismic concern, especially in older buildings. Further detailed information related to vulnerabilities of specific nonstructural building components are presented in Lesson N2, Improving the Performance of Typical Building Components, and in Briefing Papers 5 and 6. Additional information can also be found in the Resources below.

1.10 Resources

ATC, 1998, *Proceedings of Seminar on Seismic Design, Retrofit, and Performance of Nonstructural Components*, ATC 29-1 Report, Applied Technology Council, Redwood City, California.

FEMA, 1994, *Reducing The Risk of Nonstructural Earthquake Damage: A Practical Guide*, FEMA 74 Report, Federal Emergency Management Agency, Washington, D.C.

EERI, 1995, "Northridge Earthquake Reconnaissance Report," Vol. 1, Chapter 11, *Earthquake Spectra*, Supplement C to Vol. 11, Oakland, California.

Lagorio, Henry J., 1990, *Earthquakes: An Architect's Guide to Nonstructural Hazards*, John Wiley & Sons, Inc.

NCEER, 1993, *Assessment of the 1991 NEHRP Provisions for Nonstructural Components and Recommended Revisions*, NCEER-93-0003 Technical Report, National Center for Earthquake Engineering Research, Buffalo, New York.

NIST, 1996, *State of the Art Report on Seismic Design Requirements for Nonstructural Building Components*, NISTIR 5857 Report, National Institute of Standards and Technology, Gaithersburg, Maryland.

Lesson N2:
Improving the Earthquake Performance of Typical Nonstructural Building Components

2.1 Architectural: Interior Suspended Ceilings

2.1.1 Issues and Concerns

Suspended acoustical-tile ceilings have a grid of light gage metal runners (main and cross) that are hung from the structure above by vertical wires. The laid-in tiles, light fixtures, and air vents, which are supported by these runners, can be shaken loose in an earthquake and fall (Figure N2-1).

Figure N2-1 Earthquake-damaged ceiling

2.1.2 Discussion

Suspended ceilings are most likely to be damaged when they have only vertical support wires. These support wires allow the ceiling system to swing like a pendulum during an earthquake. The ceiling is then damaged by shaking loose the various elements and by striking the adjacent walls and columns. If there are compression struts and diagonal wires attaching the grid to the structure above and thereby limiting movement, the performance of the ceiling system during earthquakes will be greatly improved. See Figure N2-2.

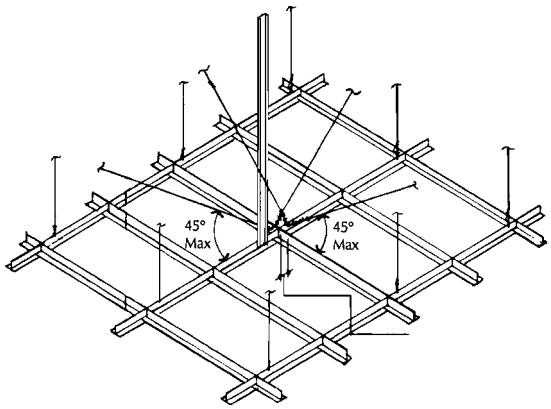

Figure N2-2 Elements of a properly braced ceiling

Light fixtures are often only supported by the ceiling metal runners. The weight of the light fixtures may contribute to the failure of the ceiling system during an earthquake, and could result in the light fixtures falling and the electrical wiring pulling loose, causing an electrical or fire hazard. If additional vertical wires are installed to support light fixtures at their corners, the falling hazard of the light fixtures during earthquakes is greatly reduced. See Figure N2-3, and the boxed design example on ceiling bracing.

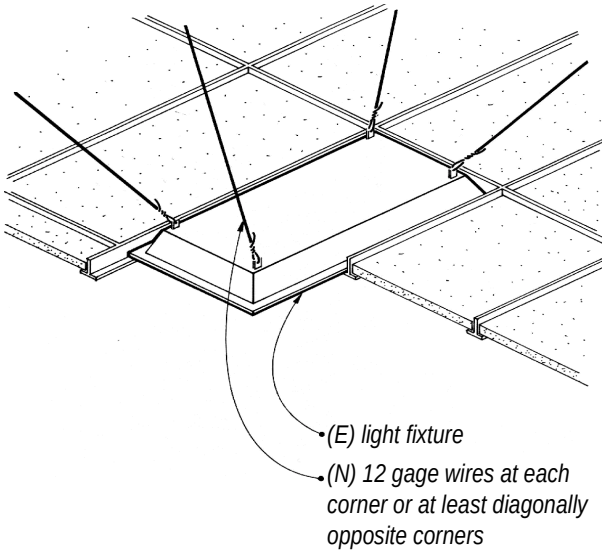

Figure N2-3 Light fixture with separate support wire. E, existing; N, new.

Building structures are often large enough to be divided into sections, separated by a seismic isolation joint, allowing independent movement of each section during an earthquake. Ceiling systems often must span across these isolation joints. Parts of the ceiling system can separate and fall if they cannot accommodate the relative movements of the structural sections at the isolation joints. The solution is to insert a flexible joint in the ceiling system at the isolation joints. Commercial products are available for these ceiling system flexible joints. Figure N2-4 is an example ceiling joint.

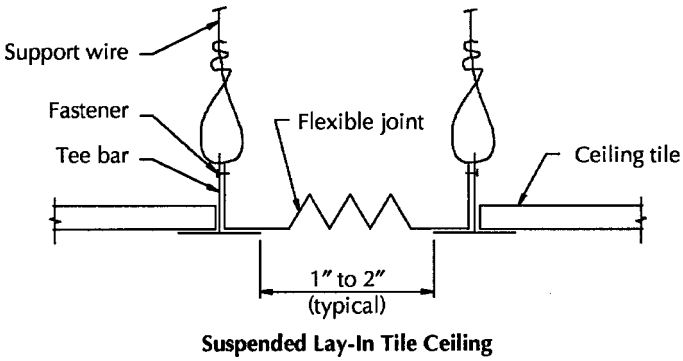

Figure N2-4 Example ceiling seismic joint

The lateral seismic restraint for a suspended ceiling system is primarily provided by the ceiling's contact with the room perimeter wall. The key to good seismic performance is that the width of the horizontal leg of the closure angle at the room perimeter is adequate to accommodate ceiling motion, and that penetrations, such as columns and piping, have adequate clearance to avoid causing restraining loads on the ceiling system.

Suspended ceiling systems are relatively lightweight, on the order of two pounds per square foot. If light fixtures are separately supported, the failure of a ceiling system is seldom a life safety issue. However, if the ceiling system is located over exit corridors or in rooms containing critical operations, falling ceiling tiles can affect life safety.

2.1.3 Resolution of Issues Related to Interior Suspended Ceilings

For Designers

Suspended ceiling systems are usually shown on architectural drawings in a reflected ceiling plan. Installation of the ceiling is usually addressed in drawing notes or a separate specification shown on interior details sheets. Characteristics of a ceiling system that will result in good earthquake performance include:

- diagonal wires and compression struts supporting the grid
- separate wires supporting light fixtures and heavy air vents
- flexible joints at building structure isolation joints
- closure angles at room perimeters that are wide enough to accommodate expected building structure movements
- adequate clearance around columns and piping penetrating the ceiling system.

For Plan Reviewers

Plan reviewers should review reflected ceiling plans, details, drawing notes, and specifications to ensure that these five

Seismic Zone 4 Ceiling Bracing Calculation Based on 1997 UBC Sections 1632.2 and 1632.5 for Standard Occupancy Buildings (Category 4 of UBC Table 16-K)

$$F_p = \frac{a_p C_a I_p}{R_p}\left[1 + 3\frac{h_x}{h_r}\right]W_p \quad \text{(Equation 32-2)}$$

Where: a_p = 1.0 (per Table 16-O)
I_p = 1.0 (per Table 16-K)
C_a = $0.44N_a$ (per Table 16-Q, assuming Soil Profile Type SD)
(N_a varies depending on location with respect to nearest fault source and source type)
R_p = 3.0 (per Table 16-O)
h_x = ceiling height above grade
h_r = height of roof above grade
h_x/h_r is assumed to be 0.95 for a top story ceiling location
W_p = 4 psf x 144 square feet tributary area to each bracing point = 576 pounds
(ceiling weight is assumed to be 4 psf per footnote 6 of Table 16-O)

$$F_p = \frac{1.0 \times 0.44 \times 1.0}{3.0}[1 + 3(0.95)]576 = 0.1467 \times 3.85 \times 576 = 325 \text{ pounds} = E$$

(assuming N_a = 1.0; C_a = 0.44)

Using Load Combination Equation 12-13 to determine Allowable Stress Design (ASD) force:
D + L + E/1.4**;** where dead and live loads are 0, because vertical load hangers are separately provided;

Using Equation 30-1:

$$E_{(\text{ASD})} = E_h + E_v, \text{ where } E_v = 0, E_{(\text{ASD})} = E_h$$

$$F_{p(\text{ASD})} = \frac{E_h}{1.4} = \frac{325}{1.4} = 232 \text{ pounds (horizontal force)}$$

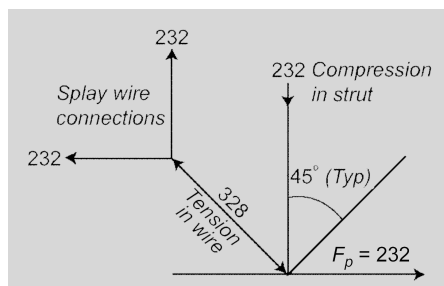

Determine tension force in diagonal wire installed at 45° from horizontal:

232 pounds horizontal force × S_2 = 328 pounds tension

Cross sectional area of 12 gage wire:

πr^2 = 3.14 x $[0.1055 / 2]^2$ = 0.00874 square inches

$f_{t(\text{of wire})}$ = 328 / 0.00874 = 37.52 ksi < F_t = 0.06 (50ksi) (1.33) = 40.0 ksi OK!

If the building is located in a Near Source location where N_a = 1.33, $C_a N_a$ = 0.585:

F_p = 0.585 / 3.0 x 3.85 x 576 = 433 pounds; $F_{p(\text{ASD})}$ = 433/ 1.4 = 309 pounds

Tension force in wire = 309 × S_2 = 437 pounds ∴ $f_{t\ (\text{of wire})}$ = 437 / 0.00874 = 49.99 ksi

Conclusion: UBC Standard 25-2 prescriptive bracing, using 4 - 12 gage splay wires installed at 45° from horizontal at a spacing not exceeding 12 feet on center may be used for suspended ceilings of Standard Occupancy buildings (I_p=1.0) in Seismic Zone 4, where maximum value of the near source factor coefficient N_a, is 1.33 or less.

bulleted characteristics are required by the Architect. Special attention should be taken for ceiling systems over exitways and critical operation rooms.

For Inspectors

Inspectors should ensure that the ceiling system is constructed according to the approved plans. Special attention should be taken for ceiling systems over exitways and critical operation rooms. Inspection should take place after all trades have completed work in the above-ceiling area, to verify that ceiling and light fixture support wires have not been moved or removed to accommodate later construction.

2.1.4 Job Aid

Included with this curriculum is a Job Aid for designers containing six standard details* for a ceiling seismic restraint system. The details conform to the 1997 *Uniform Building Code*.

2.1.5 Resources

CISCA, 1990, *Recommendations for Direct-Hung Acoustical Tile and Lay-In in Panel Ceilings, Seismic Zones 3-4,* Ceilings and Interior Systems Construction Association.

BSSC, 1997, *NEHRP Recommended Provisions for Seismic Regulations for New Buildings and Other Structures*, prepared by the Building Seismic Safety Council, funded by the Federal Earthquake Management Agency, FEMA-302 report, Washington, D.C.

Griffin, M.J. and Wen Tong, 1992, "Performance of suspended ceilings in earthquakes with recommended strengthening techniques for damage mitigation," *Proceedings, Seminar and Workshop on Seismic Design and Performance of Equipment and Nonstructural Elements,* ATC-29 report, Applied Technology Council, Redwood City, California.

ICBO, 1997, *Metal Suspension Systems For Acoustical tile and for Lay-in Panel Ceilings*, Uniform Building Code Standard 25-2 Report, International Conference of Building Officials, Whittier, California.

* Disclaimer: While the information presented in these details is believed to be correct, the Applied Technology Council, the Structural Engineers Association of California, and the California Seismic Safety Commission assume no responsibility for its accuracy. These details should not be used nor relied upon for any specific application without competent examination and verification of their accuracy, suitability, and applicability by qualified professionals. Users of this information assume all liability arising from such use.

2.2 Architectural: Interior Partitions

2.2.1 Commonly Observed Failures

It is difficult to imagine that interior walls can topple in an earthquake, but this is a real problem. Most interior partitions in an office environment do not extend to the structure above, especially when the ceiling is a suspended panel ceiling. The ceiling height partition is an economical way of separating interior space. Often, the suspended ceiling grid is continuous over the top of these partitions. When properly designed and constructed, this system can be safe. The following photograph, Figure N2-5, shows some failed conditions:

Figure N2-5 Failed wall, which damaged ceiling and furnishings, and endangered lives

2.2.2 Why Partitions Fail

Why do these partition fail? Interior partitions topple or have out-of-plane-type failure because of the following: (See Figure N2-6)

- The partitions do not extend to the structure above. Although the code required that components be designed to withstand earthquake forces since 1935, this problem was not specifically addressed by the code until the 1976 edition of the *Uniform Building Code* (UBC). In general, walls constructed before 1978 may not be attached to or braced against the structure. Some partitions are attached to suspended ceilings with the intention that the ceiling bracing would brace the wall. However, this method does not perform well and in fact, the attachment to the ceiling actually causes more damage to ceilings.
- The partitions do not always brace each other. Ceiling-height partitions are typically used for constructing offices. Therefore, crosswalls are typically 8 to 10 feet apart. At this spacing, the cross walls are ineffective in preventing movement at the midportion of the partitions.
- Heavy loads on partitions. When heavy bookshelves, racks and equipment are attached to partitions, they generate forces on the partitions during an earthquake. The partition bracing must be designed for the loads from these other elements.

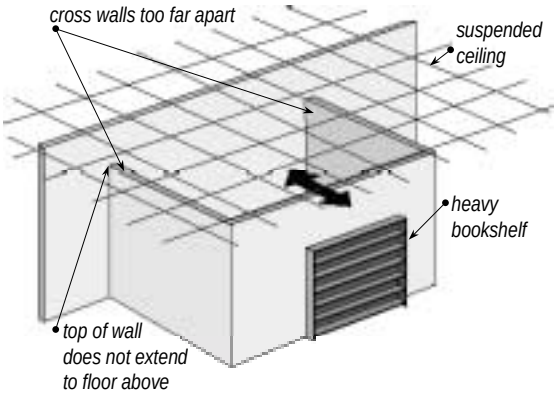

Figure N2-6 Typical configuration of an unbraced partition

Ceiling-height partition walls can be braced by one of the following methods:

- Braced to structure above. The top of the partition is braced by diagonal braces or “kickers” to structural members above. The braces are typically spaced at 4 to 6 feet apart. Braces should be staggered in alternate directions to provide an equal number resisting tension and compression. (See Figure N2-7 and Figure N2-8.)

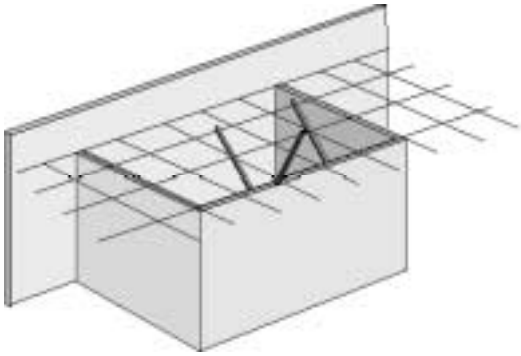

Figure N2-7 Partition braced by diagonal "kickers" whose top ends are attached to structure above.

- Brace to cross walls. Diagonal braces can be used in the horizontal plane to transfer forces to a cross wall. (See Figure N2-9.)

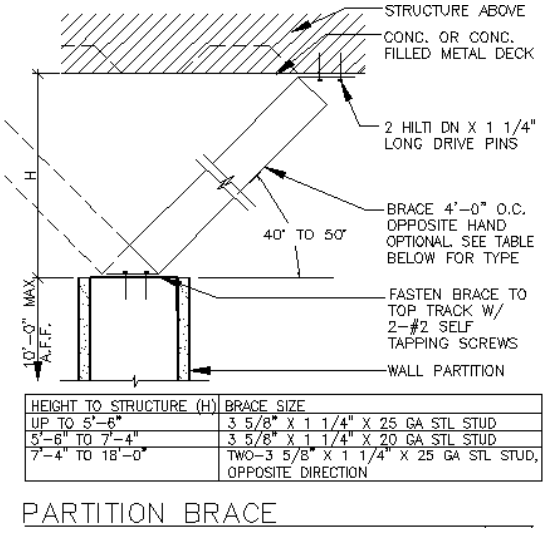

HEIGHT TO STRUCTURE (H)	BRACE SIZE
UP TO 5'-6"	3 5/8" X 1 1/4" X 25 GA STL STUD
5'-6" TO 7'-4"	3 5/8" X 1 1/4" X 20 GA STL STUD
7'-4" TO 18'-0"	TWO-3 5/8" X 1 1/4" X 25 GA STL STUD, OPPOSITE DIRECTION

Figure N2-8 Example of a partition brace design.

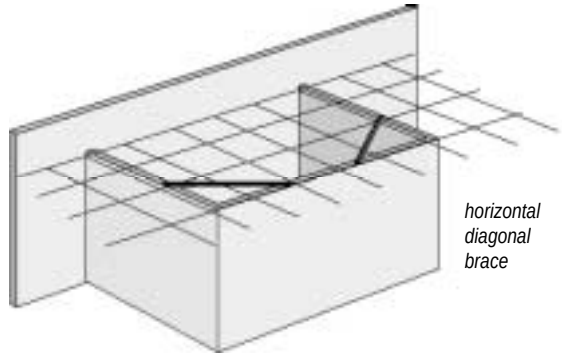

Figure N2-9 Partition braced to cross walls.

- Brace to structure wall. The top of the partitions can be braced by horizontal braces perpendicular to the partition extending to a structural wall. This can avoid conflicts with other above-ceiling items like ducts and piping. (See Figure N2-10.)

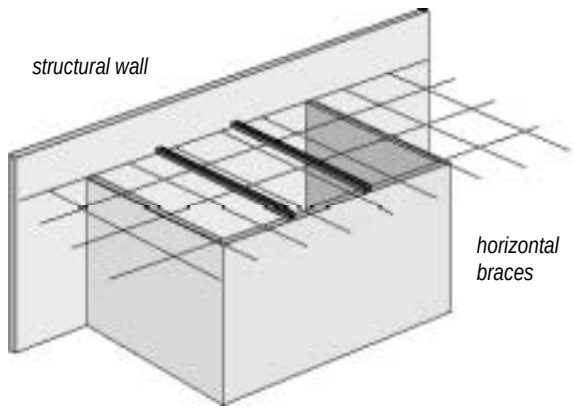

Figure N2-10 Partition braced to a structural wall

2.2.3 Resources

As described in Section 2.1, a design detail of a brace for ceiling height partitions is provided as a Job Aid. This detail is a generic detail for metal-stud-wall application. Metal studs are used as diagonal braces and connections are made with powder-actuated pins and screws. Other materials such as wood studs, lag bolts and nails can also be used in similar conditions.

2.3 Architectural: Glazing

2.3.1 Issues and Concerns

Glazing systems often fail with the glass shattering due to in-plane displacements and racking, or by glass falling out of its supporting frame due to out-of-plane forces, often combined with loss of edge blocks and sealant strips caused by racking. Glazing systems are a concern if their failure can cause hazards to pedestrians around the building perimeter, especially at building exits.

2.3.2 Discussion

Glazing systems consist of assemblies of walls that are made up from structural subframes attached to the main building structure. The assemblies may be assembled in the field, or prefabricated in sections and assembled in the field.
Five typical categories of glazing systems are:

- Stick curtainwall systems, assembled on site
- Unitized curtainwall systems, assembled from prefabricated units
- Sloped glazing and skylights, either prefabricated units or assembled on site
- "Storefront" glazing, assembled on site
- Structural glazing in which the glass is attached to its supporting framework on two to four sides with adhesive silicone without mechanical restraint.

Glass within glazing systems can be classified in terms of its configuration:

- Monolithic Glass consists of a single layer of glass.
- Laminated Glass consists of vinyl interlayers sandwiched between two or more layers of glass.
- Insulating Glass consists of layers of glass separated by air, and supported by the same frame.
- Window Film Glass has high-performance polyester film applied directly to the glass surface.

Glass within glazing systems can be classified in terms of its "heat treatment":

- Annealed Glass (AN) is everyday glass, cooled in a very controlled manner, thereby minimizing residual internal stresses.
- Heat-Strengthened (HS) Glass is two times stronger than annealed glass of the same thickness. Heat-strengthened glass is made by heating annealed glass to near its softening point, then cooling it faster than normal. When breakage does occur, heat-strengthened glass fragments into large pieces.
- Fully Tempered (FT) Glass, also called Safety Glass, is four times stronger than annealed glass of the same thickness. Fully tempered glass is made by heating annealed glass to near its softening point, followed by rapid air cooling. When breakage does occur, tempered glass fragments into small pieces, reducing the potential injury from large glass shards.

Glass within glazing systems can be classified in terms of its fastening method:

- "Marine" glazing (mostly factory built), in which the glass is clasped in a "U" rubber or vinyl gasket and then surrounded by a screwed-together aluminum frame (i.e., sliding doors and windows).
- "Wet" glazing, in which the glass is held into the frame with silicone or other sealant compound or is attached to the frame with silicone as in structural glazing.
- "Dry" glazing, in which the glass is held into the frame with either putty, a rubber or vinyl bead, or wood or metal stops. Examples of dry glazing can be found in residential and storefront windows.

Testing (Behr & Worrell, 1998) of several commercial glazing systems subjected to simulated earthquake loadings provides insight that, in general:

- Laminated glass configurations perform better than monolithic and window film glass configurations for the same glazing system.
- "Wet" glazing performs better than "dry" glazing for the same glazing system.
- Fully tempered glass performs better than annealed or heat-strengthened glass for the same glazing system.
- Flexible aluminum frames performed better than stiff aluminum frames for the same glass configuration and fastening method.
- Laminated glass captured by silicone in a wet glazed frame performs well.
- Annealed monolithic glass performs poorly. Addition of window film unanchored to the frame improves performance, but not to the level of laminated glass captured by silicone in a wet glazed frame.
- Glazing above exitways or above other frequently occupied areas (such as a patio or outside dining area) should be prevented from falling on personnel by use of appropriate canopies or awnings (see Figure N2-11). Because canopies or awnings affect the building's appearance, an architect should be consulted for design input, with proper consideration of appearance. Structural, wind, seismic, and snow design calculations may be required.

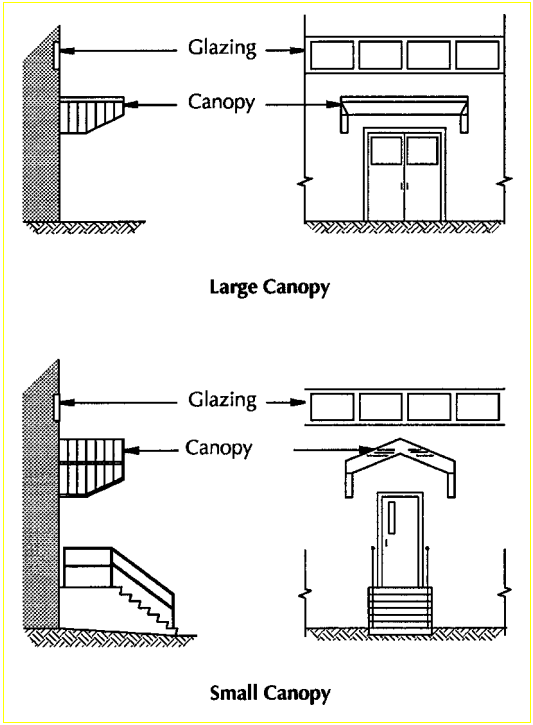

Figure N2-11 Canopies at exists for protection from falling glass.

2.3.3 Resolution of Issues Related to Glazing

For Designers

Glazing systems are usually shown on Architectural drawings in elevation views. Technical requirements and installation of the glazing is usually addressed in a schedule, drawing notes, or a separate specification. Characteristics of a glazing system that can be expected to perform well during an earthquake include:

- Laminated glass
- Fully tempered glass
- "Wet" glazing
- Flexible aluminum frames
- Any commercial system, whose use is supported by dynamic testing, and installed in a manner consistent with the tests.

Annealed monolithic window glass in existing buildings should be considered a

hazard. Performance would be improved by changing to laminated glass captured by silicone in a wet-glazed frame, or to a lesser extent, the addition of window film. Canopies or awnings should be considered above exitways, patios, or outside eating areas, if glazing is located above them.

For Plan Reviewers

Plan reviewers should review elevation views, schedules, drawing notes, and specifications to ensure that the characteristics of a glazing system that can be expected to perform well during an earthquake are required by the architect. Special attention should be paid to glazing systems over exitways.

For Inspectors

Inspectors should ensure that the glazing system is constructed according to the approved plans. Special attention should be taken for glazing systems over exitways.

2.3.4 Resources

ASTM, *Standard Specification For Flat Glass, Glazing Quality*, ASTM C1036 Report, America Society for Testing and Materials.

ASTM, *Standard Specification For Heat-Treated Flat Glass – Kind HS, Kind FT Coated And Uncoated Glass*, ASTM C1048 Report, America Society for Testing and Materials.

ASTM, *Standard Specification For Laminated Architectural Flat Glass*, ASTM C1172 Report, America Society for Testing and Materials.

Behr, R.A., and C.L.Worrell, 1998, "Limit states for architectural glass under simulated seismic loadings," *Proceedings, Seminar on seismic design, retrofit, and performance of nonstructural components, ATC-29-1 report, Applied Technology Council, Redwood City, California*.

ATC, 1997, *NEHRP Guidelines For The Seismic Rehabilitation Of Buildings*, FEMA Report 273, prepared by the Applied Technology Council for the Building Seismic Safety Council, published by the Federal Emergency Management Agency, Washington, D.C..

2.4 Architectural: Glass Block and other Nonstructural Masonry

Figure N2-12 Damaged brick veneer can be a falling hazard.

Glass block units and other nonstructural masonry are often used as free-standing architectural walls that are self-supporting for static vertical loads, held together by mortar, and structurally detached from the surrounding structure.

Acceleration of the supporting structure may cause out-of-plane dislodgment or collapse (Figure N2-12). Deformation of the supporting structure may cause in-plane unit cracking and displacement along the cracks.

These walls must be braced to resist out-of-plane forces. In addition they must be detailed to accommodate in-plane structural movements caused by building drift.

2.5 Architectural: Cladding

2.5.1 Issues and Concerns

In older buildings, cladding systems may be heavy, not well anchored, have not been designed for movement or have deteriorated connections. Failure can cause hazards to pedestrians around the building perimeter, especially at building exitways |(Figures N2-13, N2-14).

Figure N2-13 Damaged cladding can become a falling hazard.

2.5.2 Discussion

Adhered Veneer

Adhered veneer includes thin exterior finish materials secured to a backing material by adhesives. The backing may be masonry, concrete, cement plaster, or a structural framework material. The main categories of adhered veneer are:

- Ceramic tile, masonry, stone, tera cotta, or other similar materials not over one inch thick
- Glass mosaic units not over 2 inch by 2 inch by 3/8 inch thick
- Exterior plaster (stucco)

Acceleration-induced stresses can break the bond between veneer and the backing, dislodging poorly adhered veneers. Deformation of the backing caused by building drift may lead to cracking or separation of the veneer from its backing.

In retrofit projects, adhered veneer must be evaluated by visual observation as well as tapping to discern looseness or cracking that may be present. When these conditions are found, they may indicate either defective bonding to the backing or excessive in-plane flexibility of the backing or its supporting structure.

Anchored Veneer

Anchored veneer includes masonry or stone units that are attached to the supporting structure by mechanical connectors. The main categories of anchored veneer are:

- Masonry and stone units not over five inches nominal thickness
- Stone units from five inches to ten inches nominal thickness
- Stone slab units not over two inches nominal thickness

Acceleration and deformation of the supporting structure may fracture or distort the mechanical connections. Units may be dislodged or displaced once the connector fractures.

Figure N2-14 Failure of cladding elements

Anchored veneer must have adequate stability, joint detailing, and maintenance to prevent moisture penetration from weather that could destroy the anchors. In retrofit projects, anchors must be visually evaluated and, based on the engineer's judgement, tested to establish capacity to sustain design forces and deformation.

Prefabricated Panels

Prefabricated panels must be installed with adequate structural strength within themselves and their connections to resist wind, seismic, and other forces. These panels are generally attached at their perimeters to the primary structural system. The main categories of prefabricated panels are:

- Precast concrete and concrete with facing (generally stone) laminated or mechanically attached (Figures N2-15, N2-16, N2-17).
- Laminated metal-faced insulated panels
- Steel strong-back panels, with insulated, water-resistant facing, or mechanically attached metal or stone facing

Accelerations of the supporting structure may cause damage to heavy panels by distorting or fracturing the mechanical connections. Deformation or racking of the supporting structure may cause damage to any type of panel.

In retrofit projects and in new construction, the attachments of prefabricated panels to the structure must be evaluated for in-plane and out-of-plane forces and for in-plane displacement. In retrofit projects, connections must be visually inspected and, based on the engineer's judgment, tested to establish their capacity to sustain design forces and deflections.

Prefabricated panels above the first story, above a height of 12 feet, or above exitways deserve high priority. It is preferable to add new fasteners to tie the panels directly to the structural framing. If this is not practical, externally applied restraints may be required.

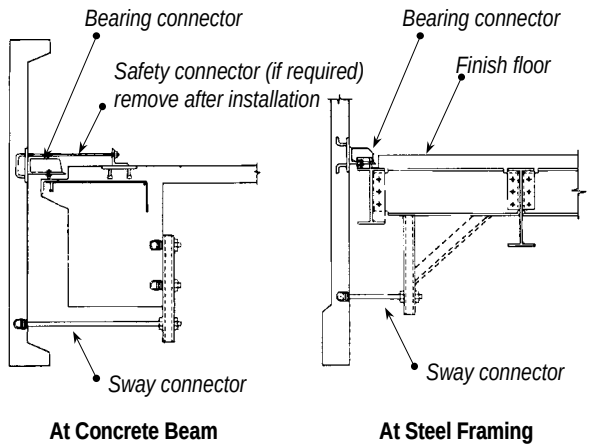

Figure N2-15 Typical anchor arrangements for precast

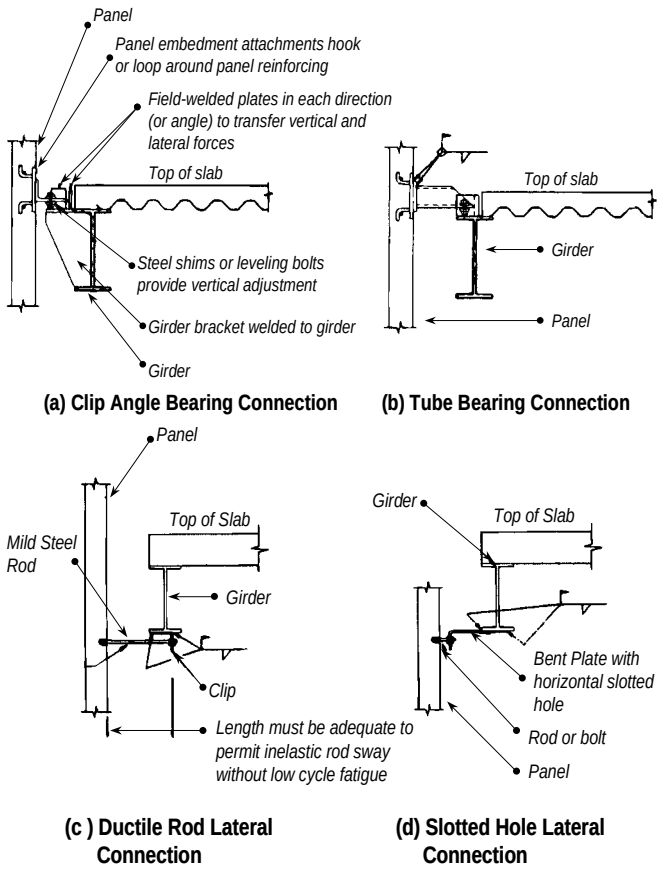

Figure N2-16 Connections for precast concrete cladding.

cladding units.

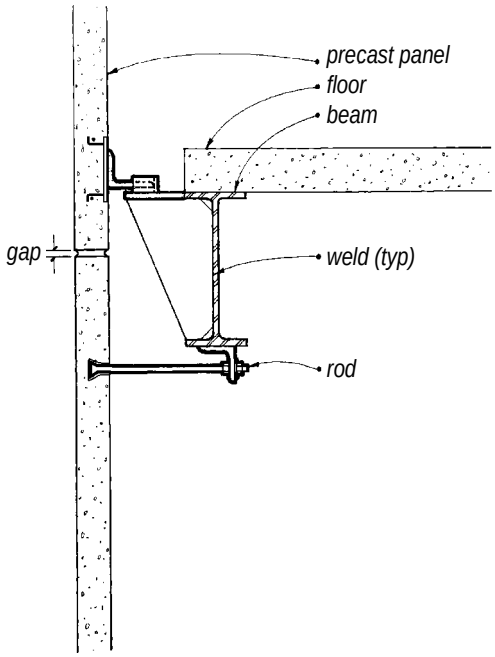

Figure N2-17 Typical connection for precast concrete units.

2.5.3 Resolution of Issues Related to Cladding

For Designers

Cladding systems are usually shown on architectural drawings in elevation views and details. Technical requirements and installation of the cladding is usually addressed in a schedule, drawing notes, or a separate specification. Characteristics of a cladding system that can be expected to perform well during an earthquake include:

- Visual inspection by a registered design professional to verify the details and installed condition of the cladding and its anchorage.
- Submittal of calculations by the same registered design professional indicating the ability of the cladding system to accommodate the applicable code forces and building structure drifts.

For Plan Reviewers

Plan reviewers should review elevation views, details, schedules, drawing notes, and specifications to ensure that they are consistent with the submitted calculations. Calculations must be checked for wind and earthquake loadings and connection details must be checked for required ductility and in-plane movement capability.

For Inspectors

Inspectors should ensure that the cladding system connections are installed according to the approved plans.

2.5.4 Resources

ATC, 1997, *NEHRP Guidelines For The Seismic Rehabilitation Of Buildings*, FEMA Report 273, prepared by the Applied Technology Council for the Building Seismic Safety Council, published by the Federal Emergency Management Agency, Washington, D.C.

Nielsen, R.J., Schmeckpeper, E.R., and Crossler, R.W., 1998, "Seismic retrofit of precast concrete connections," *Proceedings, Seminar on seismic design, retrofit, and performance of nonstructural components*, ATC-29-1 report, Applied Technology Council, Redwood City, California.

2.6 Architectural: Parapets

2.6.1 Issues and Concerns

Parapets are a concern because their failure is hazardous to pedestrians around the building perimeter, especially at building exitways.

2.6.2 Discussion

Parapets include exterior nonstructural features that project up or away from a building. Parapet systems of most interest from a falling hazard standpoint include:

- Unreinforced masonry parapets more than one-and-a-half times as high as they are thick
- Reinforced masonry parapets more than three times as high as they are thick
- Cornices or ledges constructed of stone, terra cotta, or brick
- Other appendages such as flagpoles and signs, that are similar to the above in size, weight, or potential consequences of failure.

Parapets that are not properly anchored or braced may become disengaged and fall on pedestrians below. Parapet bracing must be connected from near the top of the parapet to structural members such as roof beams. See Figures N2-18 through N2-21 for examples of parapet bracing that are acceptable when designed by a registered design professional in accordance with current model building codes.

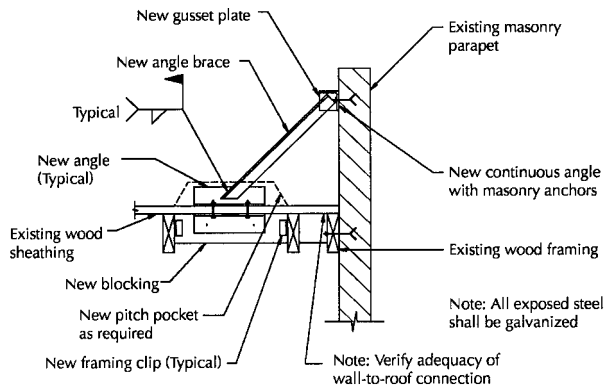

Source: Fluor Daniel

Figure N2-19 Bracing of parapet at wood roof.

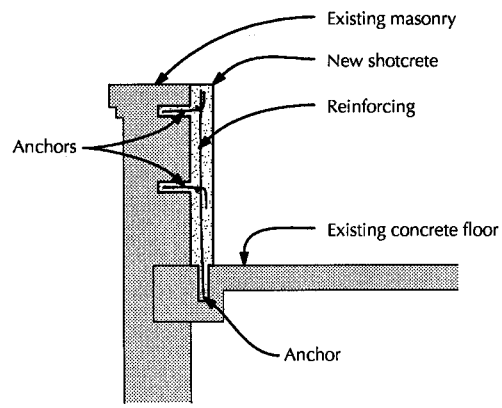

Figure N2-20 Strengthening of parapet with reinforced shotcrete overlay.

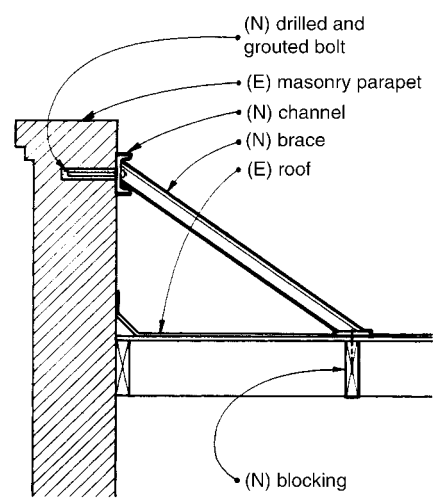

Figure N2-21 Strengthening of parapet with steel

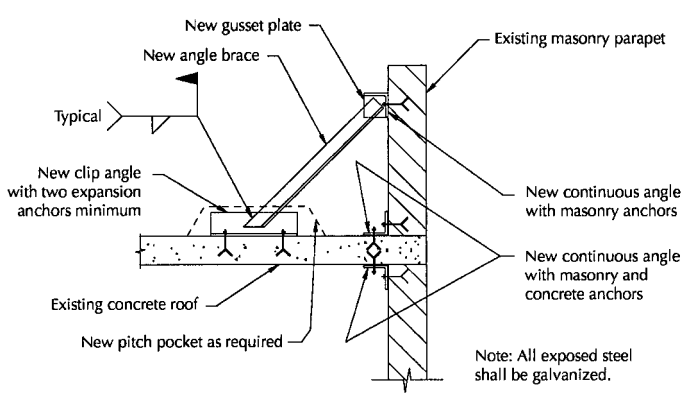

Source: Fluor Daniel

Figure N2-18 Bracing of parapet at concrete slab.

braces. E, existing; N, new.

2.6.3 Resolution of Issues Related to Parapets

For Designers

Parapets are usually shown on Architectural or Structural drawings in elevation views, sections, and details. Technical requirements and installation of the cladding is usually addressed in drawing notes or a separate specification. Characteristics of parapets that can be expected to perform well during an earthquake include:

- Reinforced masonry or concrete parapets designed by a registered design professional in accordance with current model codes.
- Parapets braced to the roof structure at their ends and at a maximum spacing of eight foot on center.

For Plan Reviewers

Plan reviewers should compare parapet elevation views, sections, details, drawing notes, and specifications to ensure that they are consistent with the submitted calculations.

For Inspectors

Inspectors should ensure that the parapets are constructed according to the approved plans.

2.6.4 Resources

ATC, 1997, *NEHRP Guidelines For The Seismic Rehabilitation Of Buildings*, FEMA Report 273, prepared by the Applied Technology Council for the Building Seismic Safety Council, published by the Federal Emergency Management Agency, Washington, D.C.

2.7 Mechanical and Electrical: Floor-or Roof-Mounted Equipment

2.7.1 Issues and Concerns

This section reviews the proper anchorage of floor-mounted equipment so that building occupants are protected and costly damage is avoided during an earthquake. Mechanical and electrical components are vulnerable to seismic damage. Damage to mechanical and electrical systems can impair building functions that may be essential to life safety. HVAC equipment attached to electrical, gas or chilled water systems can move sufficiently for to break pipes or electrical wires, creating fires or water damage.

2.7.2 Discussion

The type of mechanical equipment in a building depends on the use of the building. Office buildings will have HVAC equipment like air conditioning, fans, boilers and chillers. Other facilities will have communication equipment, medical equipment, or emergency power generators. Any permanent floor-mounted equipment must be anchored. Similarly, equipment permanently installed on tables or cabinets should also be anchored.

Equipment which is unanchored or inadequately anchored is vulnerable to sliding and can damage connecting gas, water, or electrical lines. Tall, narrow units may also be vulnerable to overturning. Positive mechanical anchorage will prevent seismic damage as well as injury to the building occupants.

Equipment on vibration isolators can be particularly vulnerable to excessive movement from earthquakes. New installations must be supported on isolators which provide horizontal restraint (Figure N2-22). Existing units can be retrofitted with these isolators, or restraints can be added to prevent horizontal movement (Figures N2-23 through N2-26).

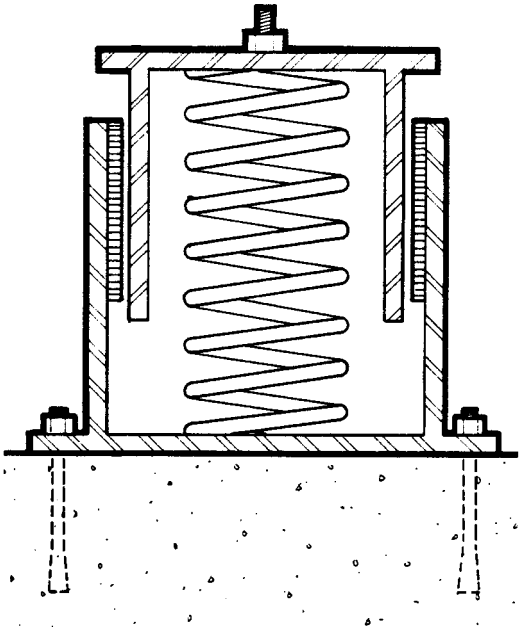

Figure N2-22 Vibration isolation assembly with lateral stops

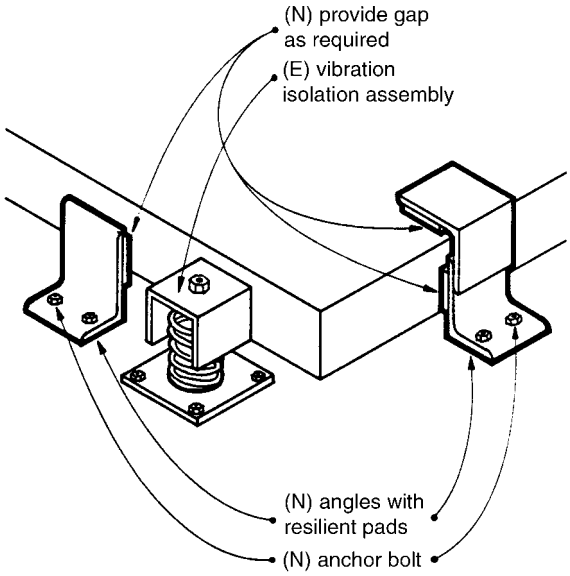

Figure N2-23 Seismic restraint added to existing equipment. E, existing; N, new.

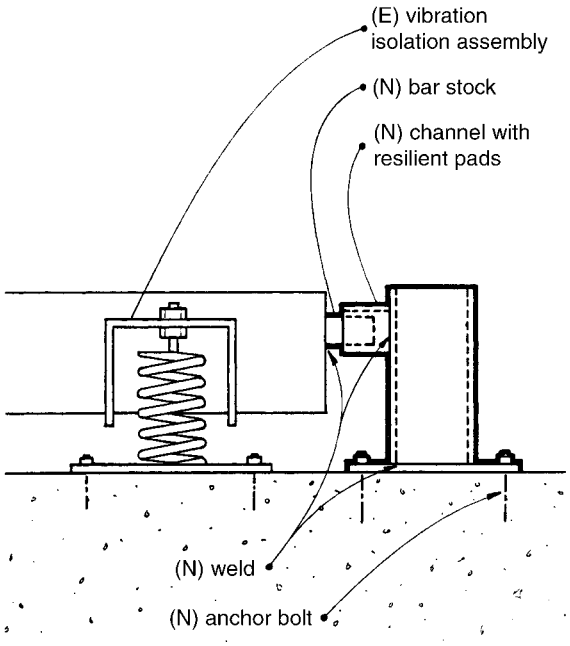

Figure N2-24 Multidirectional seismic restraint. E, existing; N, new.

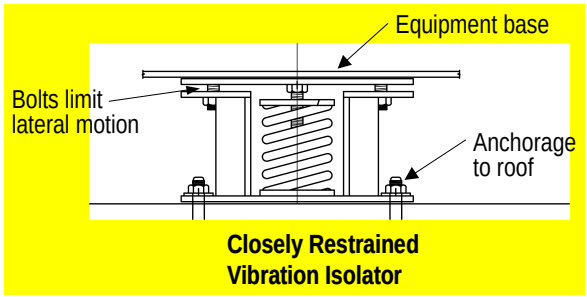

Figure N2-25 Example isolator with seismic restraint

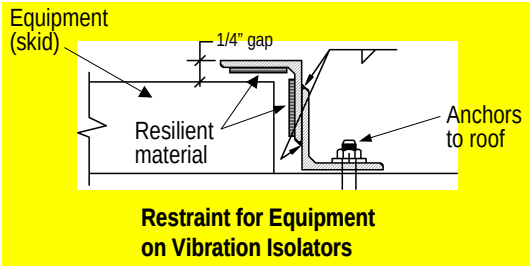

Figure N2-26 Example seismic restraint

2.7.3 Resolution of Issues Related to Mechanical and Electrical Floor- or Roof-Mounted Equipment

For Designers

The Structural Engineers Association of California has published its recommendations for the design and detailing of seismic-resistant components in its Blue Book. It recommends that construction documents should provide details for anchorage of floor-mounted equipment weighing 400 lb. or more. The 1997 UBC exempts equipment weighing less than 400lb from requiring a design of its anchorage.

Some jurisdictions have adopted similar local requirements. Other jurisdictions specializing in the construction of critical facilities may require all equipment, connected with utility hook-ups, to have anchorages designed and detailed by a design professional. As more jurisdictions outside California recognize the potential for earthquake damage, many manufacturers of equipment are providing their own certified anchorage details. In California, the manufacturers of vibration isolators will design and detail the isolators but the anchorage of the isolator to the structure needs to be designed by the structural designer.

The anchorage of kitchen equipment can be specified by reference to a publication from the Sheet Metal and Air Conditioning Contractors' National Association (SMACNA) titled: *Seismic Restraint Manual, Guidelines for Kitchen Equipment* (February, 1998). It has been reviewed by the California Office of Statewide Health Planning and Development (OSHPD) and accepted for use in California hospitals.

Commercial installations will be designed in accordance to the 1997 UBC. The methodology for calculating seismic forces has changed since the 1994 UBC. The basic formulas in the 1997 UBC for calculating the are as follows:

$$F_p = 4.0 C_a I_p W_p \qquad (32\text{-}1)$$

$$F_p = \frac{a_p C_a I_p}{R_p}\left(1 + 3\frac{h_x}{h_r}\right) \qquad (32\text{-}2)$$

where:

a_p is the in-structure Component Amplification factor which distinguishes between rigidly mounted and flexibly mounted equipment.

a_p = 2.5 for flexibly mounted equipment such as those mounted on vibration isolators

a_p = 1.0 for rigidly mounted equipment

R_p is the Component Response Modification Factor. This is based upon the ductility of the anchorage. A ductile anchorage will stretch or bend when loaded beyond its capacity and still have some reserve strength, but a nonductile anchorage will break and have no reserve strength.

R_p = 1.5 for nonductile anchorage such as shallow expansion anchors.

R_p = 3.0 for ductile anchorage such as deeply embedded anchor bolts.

C_a is the Seismic Coefficient and depends upon the seismic zone.

In seismic zone 4, $C_a = 0.44N_a$ where N_a is the Near-Source Factor. N_a varies from 1 to 1.5 depending on how close and how large the earthquake faults are.

In seismic zone 3, C_a = 0.30

I_p is the importance factor. The value determines the extent of damage allowed during an earthquake.

I_p = 1.5 for buildings and equipment which much remain operable after earthquake. Use for equipment in hospitals, fire and police stations, and emergency equipment in other buildings, and in Group H Division 1,2,6 and 7 occupancies.

I_p = 1.0 for normal buildings where the primary concern is life safety.

h_x/h_r is the ratio of the height of the equipment attachment to the height of the building.

h_x/h_r = 1 for equipment attached to the roof of the structure

h_x/h_r = 0 for equipment attached at or below the ground floor.

Intermediate values are used at all levels between the roof and the ground floor.

For Plan Reviewers

Any special structural requirements of the mechanical systems must be transmitted to the structural designer. The weight and location of mechanical equipment should be clearly noted in the construction documents and when special support is required, it should be located on the structural drawings. Often, the selection of mechanical equipment is not included in the same permit process as the main structural systems. In these cases, it is necessary to reevaluate portions of the structural system that provide vertical and lateral support. When equipment is attached to stud walls, the wall studs must be designed to support the loading.

Where roof-top equipment is mounted on sheet metal curbs, the curbs must be designed to support both the vertical and lateral loading. Special problems occur for large units mounted on more than 4 vibration isolators. When lateral loading is applied to the intermediate isolators the curb may buckle. Loads applied near the corners of the curbs are not usually a problem and units which are rigidly mounted to the curb have not been associated with curb failures. OSHPD requires that curb designed for seismic loads be used in hospitals, so many manufacturers can now provide preapproved curbs.

Anchorage details are rarely provided by the structural designer. The anchorage details are usually provided by the mechanical

engineer, equipment manufacturer, or vibration isolator manufacturer, but the anchorage calculations must be provided by a licensed engineer.

When anchorage depends upon proprietary connectors, an ICBO report must be used to determine the allowable forces. All expansion anchor manufacturers will provide this information. Sometimes, test reports are used that specify ultimate loads. When used in test reports, ultimate loads are the loads at which an anchor failed. ICBO applies a safety factor of 4 to these test values before including them in their reports. Expansion anchors and epoxy anchors have different values depending on whether special inspection is provided, so verify the loads and demand special inspection if necessary.

For Inspectiors

The most common equipment installed in commercial buildings is HVAC equipment. This equipment is concentrated in equipment rooms or on the roof but there is some equipment almost always in other locations. Ceiling-mounted fans, fire pumps, and water heaters need to be inspected as well. Switch gear and transformers located in electrical rooms must be anchored. Often overlooked are vending machines which may be located in exitways.

Large commercial kitchens will have a significant number of pieces of equipment which require anchorage. Ovens and stoves must be anchored. Walk-in cold boxes must be anchored. Preparation tables must be anchored if they include utility connections.

Tall equipment can be attached to a wall to provide adequate restraint. Wherever possible, steel studs should be a minimum of 18 gage. When attached to lightweight metal stud walls, equipment should be attached all along the top edge so that the load is spread to as many studs as possible.

If the equipment is anchored through holes provided by the manufacturer, verify that the holes are not more that 1/16 inch oversized. If they are larger, require that bushings or weld washers be added (Figures N2-27, N2-28).

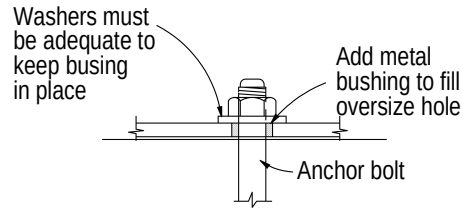

Bushing at Oversize Hole

Figure N2-27 Example of bushing

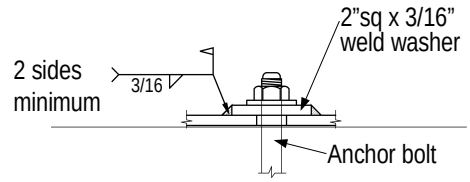

Weld Washer at oversize holes

Figure N2-28 Example of weldwasher

2.7.4 Design Example

Equipment anchorage using the 1997 UBC

Determine the seismic forces for a floor-mounted appliance (Figure N2-29)

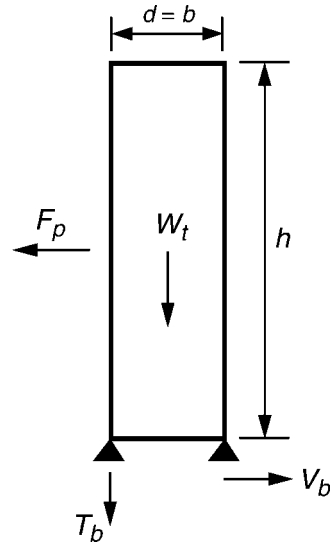

Figure N2-29 Representative appliance

Unit Dimensions

$b := 24 \cdot in$

$d := 24 \cdot in$

$h := 8 \cdot ft$

Center of Gravity

$x := \frac{b}{2}$

$y := \frac{d}{2}$

$z := \frac{h}{2}$

The weight of the equipment:

$W_{unit} := 890 \cdot Lbs$

$W_{contents} := b \cdot d \cdot h \cdot 20 \cdot pcf = 640$ lbs

$W_t := W_{unit} + W_{contents} = 1530$ lbs

The seismic coefficient:

In-structure Component Amplification Factor for flexibility mounted equipment: $a_p = 2.5$

Component Response Modification Factor for shallow expansion anchors: $R_p = 1.5$

Near-Source Factors for structure not located near a fault: $N_a = 1.0$

Seismic Coefficient for seismic zone 4, soil profile S_D: $C_a = 0.44 N_a$

Importance factor for normal commercial facility: $I_p = 1.0$

Ratio of building height to story height (h_x/h_r): $H_{ratio} = 0$ (at the ground floor)

The seismic force is:

$$F_p = \frac{a_p C_a I_p}{R_p}\left(1 + 3H_{ratio}\right) W_t$$

$F_p = 1122$ lbs

Anchorage calculations:

$M_{ot} = F_p z$ (overturning moment)

$M_{ot} = 4488 \text{ lbs} \cdot \text{ft}$

$M_{dl} = 0.85 W_t \frac{b}{2}$ (dead load resisting moment)

$M_{dl} = 1300.5 \text{ lbs} \cdot \text{ft}$

Anchor bolt forces:

For working stress design divide by 1.4

$$T_b = \frac{M_{ot} - M_{dl}}{2 \cdot \text{ft}} \frac{1}{2} \frac{1}{1.4}$$

$T_b = 569.196$ lbs

$$V_b = \frac{F_p}{4} \frac{1}{1.4}$$

$V_b = 200.357$ lbs

3/8" expansion anchors (get values from the ICBO report)

$V_c = 1100$ lbs

$T_c = 1210$ lbs

$$\left(\frac{V_b}{V_c}\right)^{1.5} + \left(\frac{T_b}{T_c}\right)^{1.5} = 0.653 < 1.00 \text{ OK}$$

2.8 Mechanical: Suspended Equipment, Ducts and Pipes

2.8.1 Issues and Concerns

This section reviews how proper earthquake bracing of suspended equipment, ducts and small pipes that are common in commercial and institutional buildings can protect occupants and avoid costly damage.

The primary concern in earthquake-resistant construction is the safety of the building occupants and of the public. Suspended equipment, ducts and pipes can become a hazard to the building occupants if hangers fail during an earthquake. When improperly braced, excessive movement can cause the failure of water or gas pipes resulting in flooding or fire damage. If the these failures cause the loss of use of a hospital, police or fire station then the risk extends to the public who depend upon these facilities immediately after an earthquake.

Understanding how nonstructural components perform and the potential hazards involved is necessary in reducing the risk they create. First we must attempt to determine the cause of these hazards and can then address how to reduce their occurrence and severity.

2.8.2 Discussion

The nature of the problem depends upon the perception of the individuals involved. A building occupant expects a safe environment in which to work and live. A building owner expects damage to his building to be limited so as not to incur excessive repair expense. Businesses expect that their livelihood will not be destroyed. The general public expects that hospitals, fire stations and police will be available during and immediately after an earthquake.

During the 1971 San Fernando earthquake, many hospitals suffered major nonstructural damage. It was recognized that the design of hospitals should require that they be built to remain functional after an earthquake. Part of this requirement was that mechanical systems be stabilized. As a result, the Sheet Metal Industry Fund of Los Angeles published *Guidelines for Seismic Restraint of Mechanical Systems* in 1976. These bracing techniques, which have been developed farther over the last twenty years, are now recognized as being useful in buildings other than hospitals.

Since the 1906 San Francisco earthquake it has been noted that earthquake-related fires can cause more property damage than the earthquake itself. These fires occur at a time when the fire department is already fully occupied with more pressing concerns such as injures and rescues. The design of fire protection systems has included the effects of earthquakes since the 1940s. The National Fire Protection Association (NFPA) provides the minimum requirements for the design and installation of automatic sprinkler systems and exposure protection sprinkler systems. The stated purpose of their seismic standard, NFPA 13, it to provide a reasonable degree of protection for life and property from fire.

In the past, most building-related deaths and injuries that occurred resulted from the failure of the primary structural systems but, as the standard of earthquake-resistant construction continues to rise for primary structural components, more damage and injuries occur related to nonstructural components. After recent earthquakes many cases were noted of nonstructural components being solely responsible for the damage occurring in buildings resulting in hundreds of millions of dollars in repair costs, often closing buildings for weeks or months.

The Olive View Medical Center, located about 16 km from the epicenter of the January 17, 1994 Northridge earthquake, had severe damage to nonstructural elements including mechanical and electrical equipment, elevators, ceilings, partitions and building contents. The hospital was forced to evacuate all their

patients as a result of the failures of the nonstructural systems.

In responding to these concerns, we must differentiate between life safety hazards and economic loss and inconveniences resulting from earthquake damage. Suspended equipment, ducts and pipes may be damaged if not adequately supported laterally. If their vertical support does not fail, the damage may be only a costly inconvenience. However, the failure of these components could be a life safety issue if they occurred in a hospital.

The Cause of Earthquake Hazards

All structures respond to earthquakes by swaying. This motion causes the structure's components to deflect. Components of a structure will naturally try to stay in place because of their inertia. If suspended components are not laterally braced this will cause them initially to swing like a pendulum relative to the building, Figure N2-30. The rate at which the components swing naturally depends on their weight and hanger length, and not on the motion of the building. Thus components of the same building may swing at different rates.

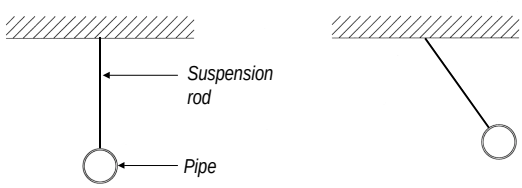

Figure N2-30 Movement of unrestrained pipe in an earthquake.

The problem with allowing components to swing are: 1) they could flex their hangers or hanger connections so that the hangers then fail (Figures N2-31 and N2-32); 2) they could hit other nearby components or hangers causing damage to both components; 3) connected components, such as pipes connected to equipment, swinging at a different rate, could become overstressed and fail where they are connected. Sometimes, free-swinging components are allowed if these problems are addressed (Figure N2-31).

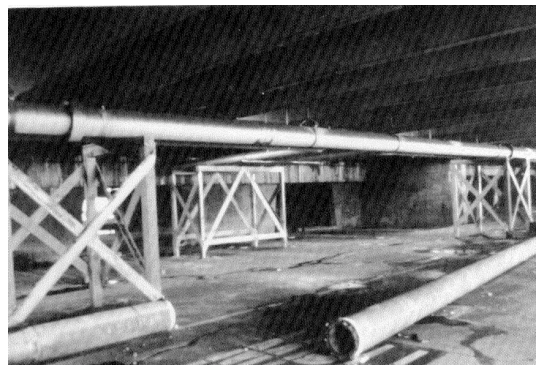

Figure N2-31 Piping failure. Note temporary shoring provides support

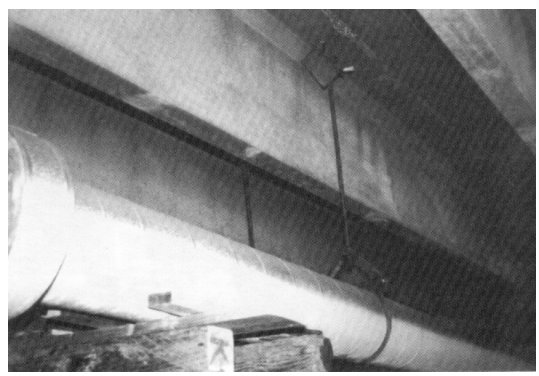

Figure N2-32 Failure of typical pipe hanger support that pulled out of flange prestressed concrete double-tee.

Mechanical systems and components have traditionally been loosely tied to the structure both to allow movement of the components and to isolate the structure from noise and vibration. It is obvious that the requirements for restraint against seismic motion can contradict the operational requirements. The code-writing community has wrestled with this and other questions regarding damage and life safety such as:

- Where will damage occur?
- Can this damage be totally avoided?

- How much design effort is required for total safety?
- How much damage is acceptable?
- What design, inspection and construction effort is required to limit damage and provide reasonable safety?
- What is the cost impact of nonstructural damage control?

Work has been done in California to find practical solutions to these questions. It is clear that both lives and money can be saved, and injuries prevented, by the addition of the most simple bracing to nonstructural components, for example, lateral bracing of suspended systems.

2.8.3 Resolution of Issues Related to Suspended Equipment, Ducts and Pipes

For the Designer

The Structural Engineers Association of California has published its recommendations for the design and detailing of seismic resistant components in its Blue Book. It recommends that construction documents should provide details for anchorage of hanging equipment weighing 20 lb or more (Figure N2-33).

Some jurisdictions have adopted similar requirements and these local requirements are well-known among structural designers. However, other jurisdictions specializing in the construction of critical facilities may require all equipment anchorage to be designed and detailed by a design professional. As more jurisdictions outside California recognize the potential for earthquake damage, many manufacturers of equipment are providing their own certified anchorage details.

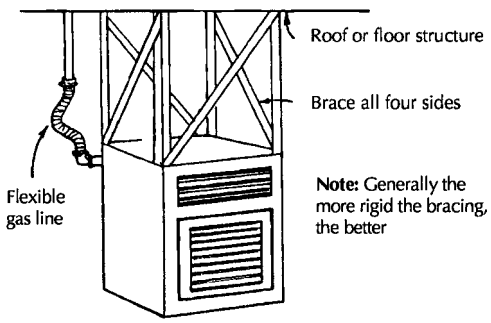

Figure N2-33 A roof-hung mechanical unit with seismic bracing and flexible connection.

The design of duct and pipe bracing is a complicated process. Ducts and pipes are not single isolated components and must be treated in a systematic fashion. Because of this, nationally recognized publications are often referenced in the construction documents and the installation is left up to the subcontractor. While these publications cover all of the common bracing details for installation in most structural systems, care must be taken to insure that they are appropriate. As a minimum, any designer, inspector, or builder using such a construction document should have access to the publication. Construction documents which reference such a publication should also require that the publication be available on the job site during the construction and inspection phases of the project.

The SMACNA document, *Seismic Restraint Manual, Guidelines for Mechanical Systems* (February, 1998) covers the bracing of ducts up to 120”x60” and pipes up to 16” in diameter. The manual designates three seismic hazard levels (SHLs). Seismic hazard level A is used for critical facilities like hospitals, fire stations and police stations. Seismic hazard level B is for use in typical commercial construction in California. Seismic hazard level C is provided for areas outside California which have lower seismic risk. It is the design professional’s responsibility to determine which seismic hazard level is appropriate for a particular structure.

The SMACNA manual covers requirements for both single pipes and multiple pipes on trapezes. The bracing requirements are the same for both, but different details are used.

Fire sprinkler systems are usually designed and installed in accordance with NFPA 13. This document is not an installation manual. It provides a systematic design procedure and tables of design information suitable for planning and implementing the design of the bracing system. While the manual does not cover all the problems associated with general mechanical systems, it is a valuable reference for the designer of bracing for piping systems (Figures N2-34 to N2-40).

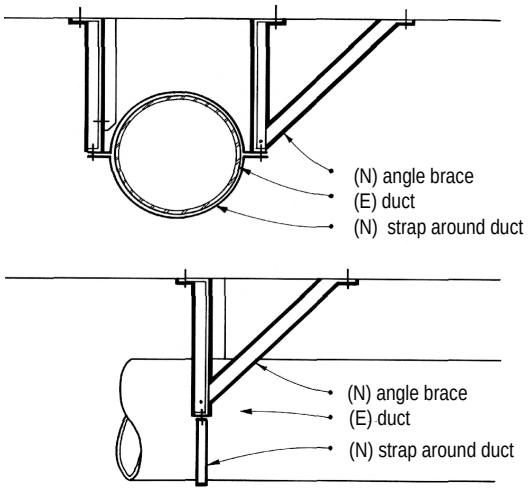

Figure N2-34 Typical bracing for round ducts. E, existing; N, new.

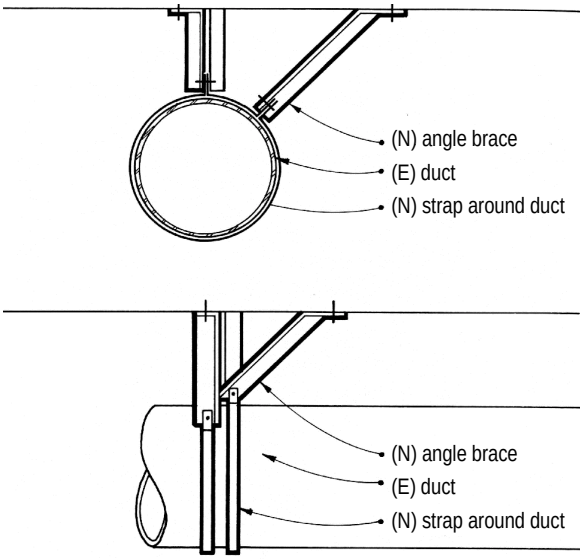

Figure N2-35 Typical bracing for round ducts. E, existing; N, new.

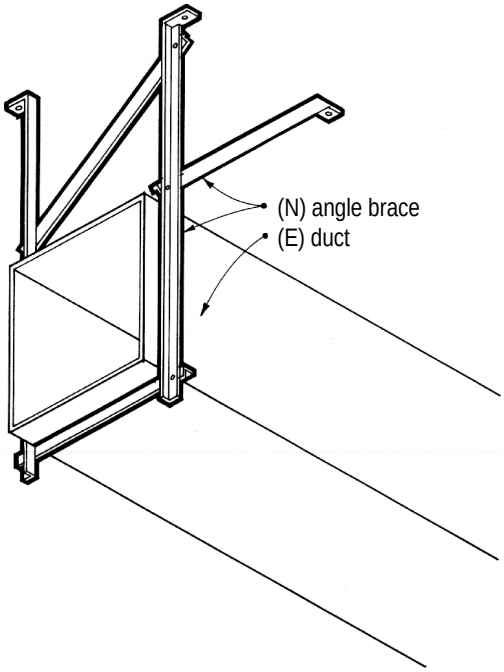

Figure N2-36 Typical bracing for rectangular ducts. E, existing; N, new.

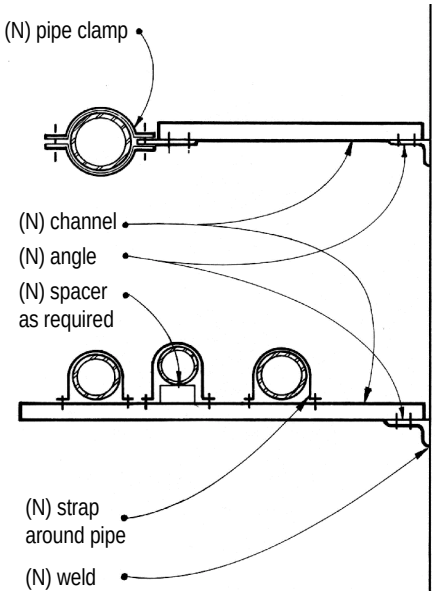

Figure N2-37 Typical bracing for pipes. E, existing; N, new.

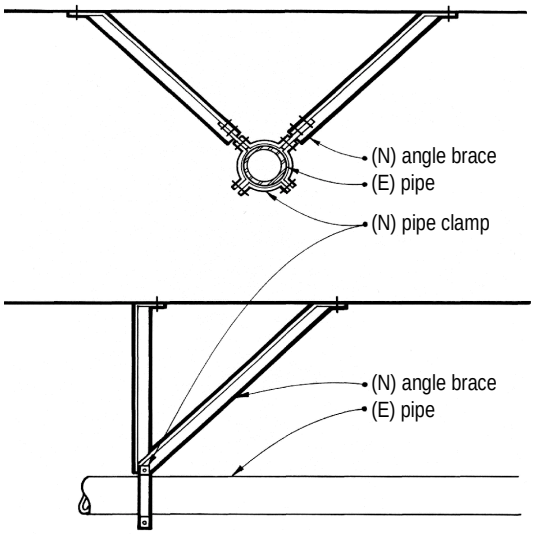

Figure N2-38 Typical bracing for pipes. E, existing; N, new.

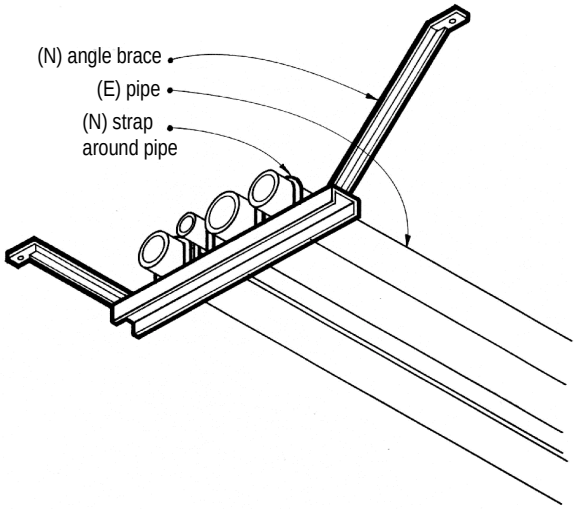

Figure N2-39 Typical bracing for pipes. E, existing; N, new.

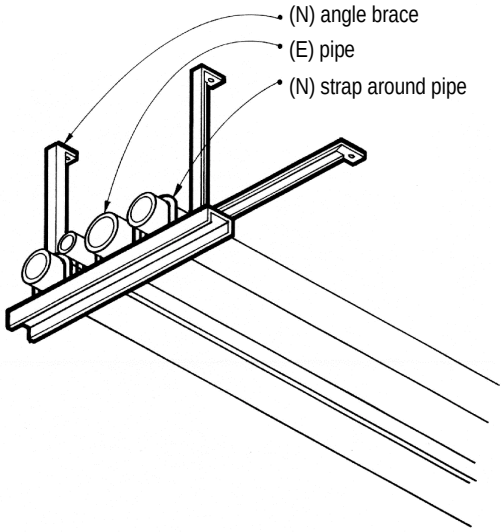

Figure N2-40 Typical bracing for pipes. E, existing; N, new.

Manufacturers of pipe hangers and bracing channels often have catalogs of bracing details which may be suitable. The best manuals will have OSHPD approval. Currently, OSHPD-approved bracing manuals are available from B-Line, Mason Industries, SuperStrut and others.

Special care should be taken to ensure that the structural system which supports a mechanical system is adequate. The weight of suspended equipment must be added to the floor dead load. A couple of pounds per square foot added to the dead load during design can account for many conditions, but where heavy duct and pipe runs are parallel to just one joist, or heavy equipment is suspended, their specific effects should be accounted for. Examples of pipe weights are provided in Tables N8-1 and N8-2.

For Plan Reviewers

Any special structural requirements of the mechanical systems must be transmitted to the structural designer. The weight and location of mechanical equipment should be clearly noted in the construction documents and when special support is required, it should be located on the structural drawings. Often, the selection of mechanical equipment is not included in the same permit process as the main structural systems. In these cases, it is necessary to reevaluate portions of the structural system that provide vertical and lateral support.

For ducts and pipes, the 1997 *Uniform Building Code* (UBC) defines equipment requiring bracing to include "major conduit, duct and piping". This is somewhat in conflict with the Uniform Mechanical Code (UMC) which says that sway bracing is required for all pipes. The California Building Code provisions applying to schools and hospitals is more precise and states that all pipes and ducts be braced except:

- Gas piping less than 1 inch in diameter
- Piping in boiler and mechanical equipment rooms less than 1.25 inches in diameter.
- All (other) piping less than 2.5 inches in diameter.

Table N8-1 Weight of Pipes Full of Water

Diameter (inches)	Weight (lb/ft)	Diameter (inches)	Weight (lb/ft)
2 ½	7.9	8	50.3
3	10.8	10	74.4
4	16.3	12	98.6
5	23.3	14	122
6	31.5	16	159

Table N8-2 Weight of Steel Ducts

Size (inches)	Weight (lb/ft)	Size (inches)	Weight (lb/ft)	Size (inches)	Weight (lb/ft)	Size (inches)	Weight (lb/ft)
30x30	17	60x60	103	54x28	34	96x48	97
42x42	29	84x84	129	60x30	39	108x54	110
54x54	46	96x96	34	84x42	74	120x60	121

- All piping suspended by individual hangers 12 inches or less in length from the top of the pipe to the bottom of the support for the hanger.
- All electrical conduit less than 2.5 inches in diameter.
- All rectangular air-handling ducts less than 6 square feet in cross-sectional area.
- All round air-handling ducts less than 28 inches in diameter.
- All ducts suspended by hangers 12 inches or less in length from the top of the duct to the bottom of the support for the hanger.

These exceptions have been allowed in California hospitals since the mid 1970s and have been well validated during subsequent earthquakes.

The use of bracing manuals is often adequate for construction where there are relatively few ducts and pipes that require bracing. In other cases more attention will be required. Larger buildings necessarily require larger ducts and pipes to function which may be beyond the scope of the manuals. Industrial facilities may have hazardous materials or special life-safety requirements. Occupancies described in the UBC as group H division 1,2,6 or 7 are subject to special requirements which require 50% more anchorage or bracing capacity than ordinary occupancies. Critical facilities, which must be in operation immediately after an earthquake, also require special consideration. In simple installations, this may require bracing plans to be submitted. In the case of central plants and boiler rooms, where there is a lot of congestion, it may be impossible to pre-plan the bracing so, special inspection can be used. The special inspector need not be present continuously during the installation of the bracing but the size and location of each brace, and its components and connections should be verified against the design details.

In any project involving bracing it is important to require that any referenced bracing manuals be available at the construction site for review by the inspector and the installation team.

Fire sprinklers, designed in accordance with NFPA 13, require the submittal of complete shop drawings. These drawings have been traditionally reviewed by the Fire Marshal who may not have the technical background to check the bracing for code compliance. The bracing should be subjected to the same review, by qualified individuals, as all the other nonstructural elements which affect public safety.

The single most vulnerable component in fire systems is the sprinkler head. Damage to the heads results from impact with structural and nonstructural features (Figure N2-38). Gyp board ceilings, and to a lesser extent T-bar ceilings, act as restraint points where the sprinkler heads penetrate. Inadequately restrained ceilings can pull on the heads and break them, to actuate the system or cause damage to the branch lines. U-hangers, which allow uplift of the lines, can add to the problem of broken sprinkler heads (Figures N2-41 and N2-42).

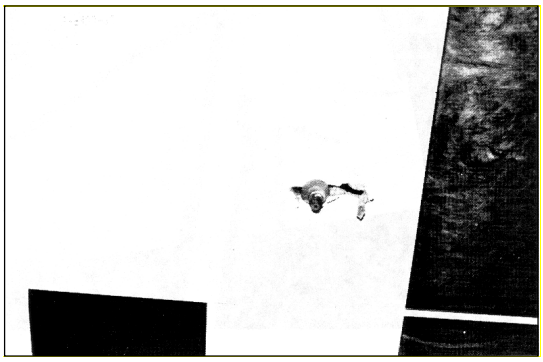

Figure N2-41 Unintended restraint of sprinkler heads by sheetrock

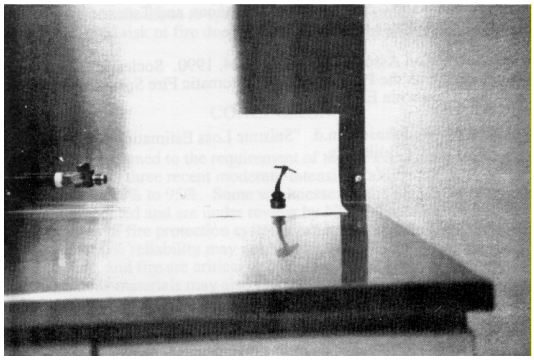

Figure N2-42 Detached sprinkler heads, broken as a result of pounding against structural features.

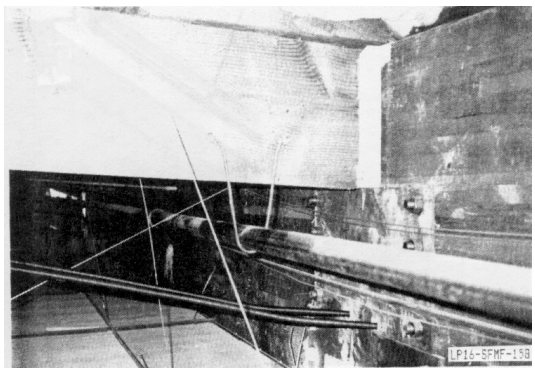

Figure N2-43 U-hooks provide only downward support

All piping systems are subjected to similar types of failures. Eccentric beam clamps and hooks induce prying action and have resulted in support failure. They must be included in the design. Concentric clamps can be used if restrainers are added to prevent movement (Figure N2-43). Piping configurations may also fail if inadequate flexibility is provided to accommodate movement relative to the building. Clearance must be provided around independent structures, and flexible joints must be provided where unbraced pipes are attached to equipment. Powder-driven fasteners should not be used with hanging loads over 100 lb.

The 1997 *Uniform Building Code* has significantly changed the force levels required for the design of mechanical systems from the requirements of all previous codes. The introduction of a height factor increases the design force at the roof of a building to four times the force at the ground floor. Other factors have been added to increase the design force for the type of soil and for the effects of nearby earthquake faults. Additionally, some confusion will result from the change from "working stress design" where the factors of safety are in the allowable stresses, to "strength design" where the factors of safety are split between the material strengths and the loads. For seismic design, where live loads are not considered, the new loads can be divided by 1.4 to obtain the equivalent working stress loads.

Commonly used bracing manuals for ducts and pipes have <u>not</u> been converted to the 1997 UBC and since OSHPD is not adopting the new code, the manuals may not be updated until the provisions of the 2000 code are known. However, properly braced systems have performed well in recent earthquakes so the force level is not as important as having a complete bracing system.

For The Inspector

The construction documents should provide detailed requirements for the anchorage of equipment (Figure N2-44). If the plans are missing the required details, it is important to get the designer's approval before installation.

If the installation of concrete anchors requires inspection, make sure that this has been scheduled before the work starts.

The installation of hanging equipment should follow the clear and accurate details provided by the designer. The sizes and spacing of braces and connections must be checked and all the bolted connections should be tightened. Make sure that all the bolts have been installed. When cable sway bracing is used, make sure that there is very little sag in the cables. If both hangers and cable bracing are used, the cables should be

tight enough to prevent movement but not so tight that they support the weight of the unit.

When installation details have not been provided by the designer, it is not meant to imply that anchorage is not required. Usually, installation instructions will be provided by the manufacturer. Generally, all of the provided holes should be filled with bolts except when closely spaced holes are provide for adjustment. For example, expansion anchors should not be installed closer together than about 6 diameters.

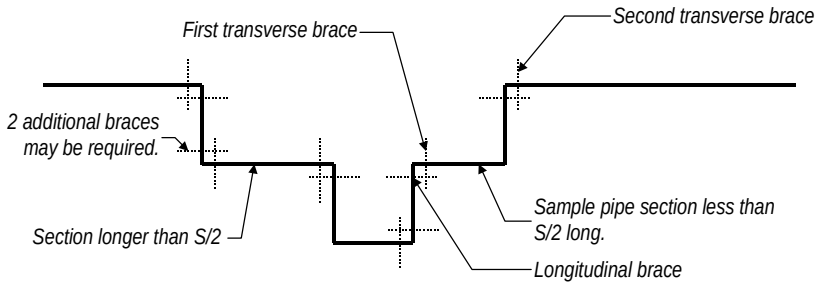

Figure N2-45 Specially engineered braces for recurring short sections of pipe

When reviewing the installation of duct and pipe bracing make sure that the installation manual is available on the job site and refer to the manual whenever necessary. You will be checking the brace spacing to see that it matches the correct table and that the connections are of the size and configuration required in the manual.

The SMACNA guidelines provide the industry standard for the spacing of transverse and longitudinal bracing. In ducts, transverse bracing occurs every 30 feet while longitudinal bracing occurs every 60 feet. In pipes, transverse bracing occurs every 40 feet while longitudinal bracing usually occurs every 80 feet. However, pipes larger than 10 inches require longitudinal bracing spaced at 40 feet.

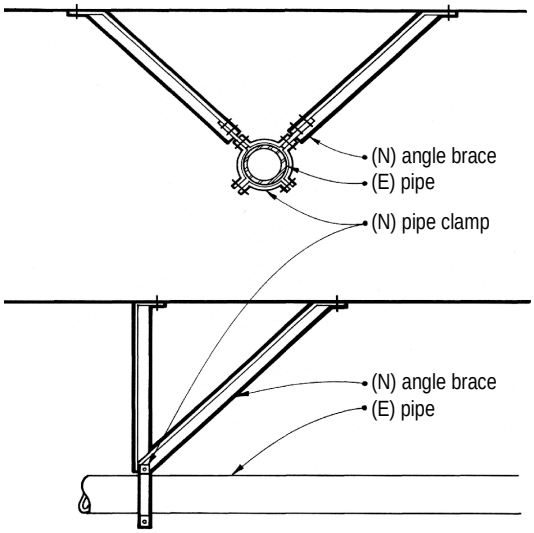

Figure N2-44 Typical bracing for pipes. E, existing; N, new.

In boiler rooms and equipment rooms where there is heavy congestion, some accommodations may have to be made. It would be acceptable to have one brace spacing be 5 feet longer that otherwise permitted if the next spacing is 5 feet shorter. Most of the time careful planning will avoid problems, but sometimes specially engineered braces will be required (Figure N2-45).

The SMACNA *Guidelines for Mechanical Systems* have many specific requirements and guidelines which cover many common situations.

- In-line equipment must be braced independently of ducts or pipes. If an in-line fan weighs more than 20 lb then it needs additional bracing. Coils and VAV boxes are not generally considered to be equipment and are not braced independently.
- Flexible connectors are required between piping and equipment unless the pipes are braced and the equipment is rigidly mounted.
- Provide swing joints in pipes where they go through building seismic separations or expansion joints (Figure N2-46). The design professional should specify the amount of movement which must be accommodated.
- Solid bracing like angles or channels should not be mixed with cable bracing.
- Transverse bracing for one pipe run may also act as longitudinal bracing for another pipe run at 90 degree turns if the bracing is installed within 24 inches of the elbow and the brace is sized as a longitudinal brace.
- Branch lines may not brace main lines
- Unbraced ducts and pipes should have 6 inches of clearance to the vertical and diagonal ceiling hanger wires.

Other things to be aware of are:

- Do not allow anything to be supported anything from hangers or braces already installed and in use.
- Duct diffusers should be attached to braced ducts with screws. At unbraced ducts they should be secured with wires to the structure above.

Automated fire systems have the same inspection requirements as other mechanical systems. All of the concerns listed above should be reviewed. Additionally, sprinkler heads need clearance where they penetrate the ceiling. NFPA requires 1 inch clearance for pipes up to 4 inches in diameter and 2 inches of clearance for larger pipes.

2.8.4 Other Suspended Equipment

Though not included in this section, other suspended systems are subject to similar requirements. Major conduit is to be braced the same as piping systems. Electric cable trays and bus ducts need to be braced and while the systems will require special design, the bracing and its details will be similar to those for ducts and pipes.

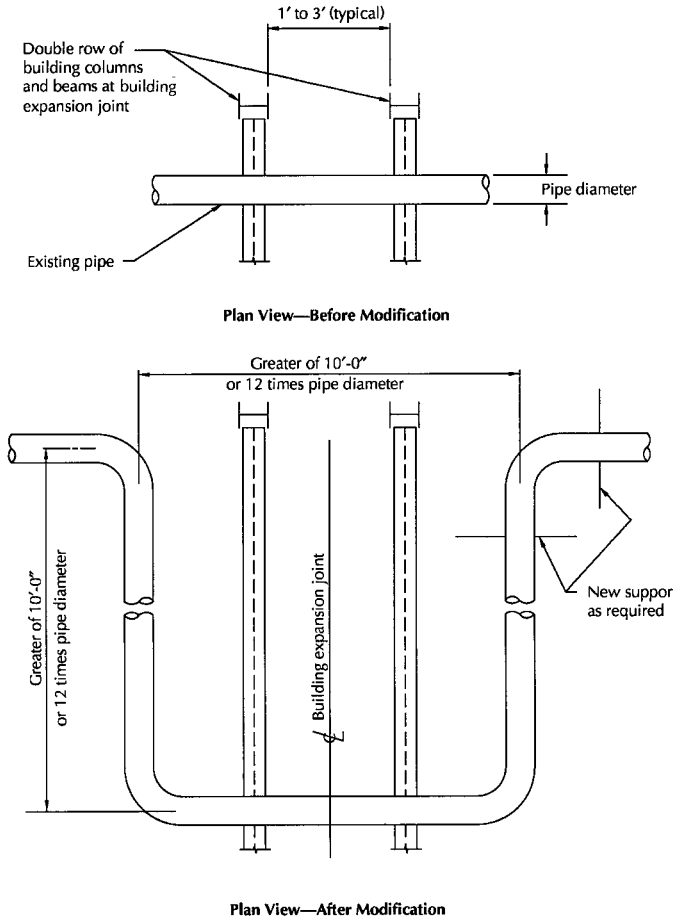

Figure N2-46 Typical bracing modification for

2.8.6 Resources

URS, *Northridge Earthquake Study of Seismic Design Factors for Hospital Nonstructural Components*, URS Consultants, Inc., John A. Blume & Associates, Engineers, prepared for Office of Statewide Health Planning and Development.

SMACCNA, *Seismic Restraint Manual, Guidelines for Mechanical Systems,* Sheet Metal and Air Conditioning Contractors' National Association, Chantilly, Virginia.

J. Marx Ayres and Tseng-Yao Sun, *Earthquake-Resistive Construction for Mechanical Systems Light Fixtures and Ceilings,* prepared for the Los Angeles Unified School District.

EERI, Earthquake Engineering Research Institute, Nonstructural Issues of Seismic Design and Construction, National Science Foundation Publication No. 84-04 Report, Oakland, California.

2.9 Mechanical: Water Heaters

2.9.1 Issues and Concerns

This section will review the proper bracing and anchorage details for residential domestic hot-water heaters. The concern during an earthquake is that the gas utility lines attached to the water heater will break, resulting in life-threatening fire.

2.9.2 Discussion

Water heaters are vulnerable to earthquake damage because they are tall and slender. When full of water they are heavy. A typical 40 gallon residential water heater weighs more than 400 lb and is 18 inches wide and 5 feet tall. The water heater in a typical residence is the most likely nonstructural component to be damaged in an earthquake.

When unanchored, the potential for a water heater tipping over is high even in small earthquakes. When connected to gas lines, the danger is immediate. The pilot light can ignite leaking gas before the earthquake is over. Often, water heaters are located in laundry rooms near the back door. A fire occurring near an exit is dangerous and could block the occupants from exiting safely.

2.9.3 Resolution

Water heaters must be strapped to the wall. A strap at the top and bottom is required if the water heater is not bolted to the floor. Water heaters on stands must be bolted to the stand and the stand must be bolted to the floor. If the water heater is bolted to the stand and the stand is bolted to the floor, the bottom strap is not required.

Water heaters installed on the ground floor may be strapped to the wall with plumbers tape. The plumbers tape should wrap around the water heater to prevent moving sideways. The tape should be bolted to rigid struts that are in turn fastened into structural studs. (See Figure N2-47)

When water heaters are installed on second floors, in ceilings or attics, heavier bracing is required. Typical 40-gallon domestic water heaters installed on the second floor of a two-story house should be strapped with ¾”x22-gage straps, without the holes that are in plumbers tape, using the same detail as on grade installations. Larger units or units mounted higher in a building must have their anchorage designed.

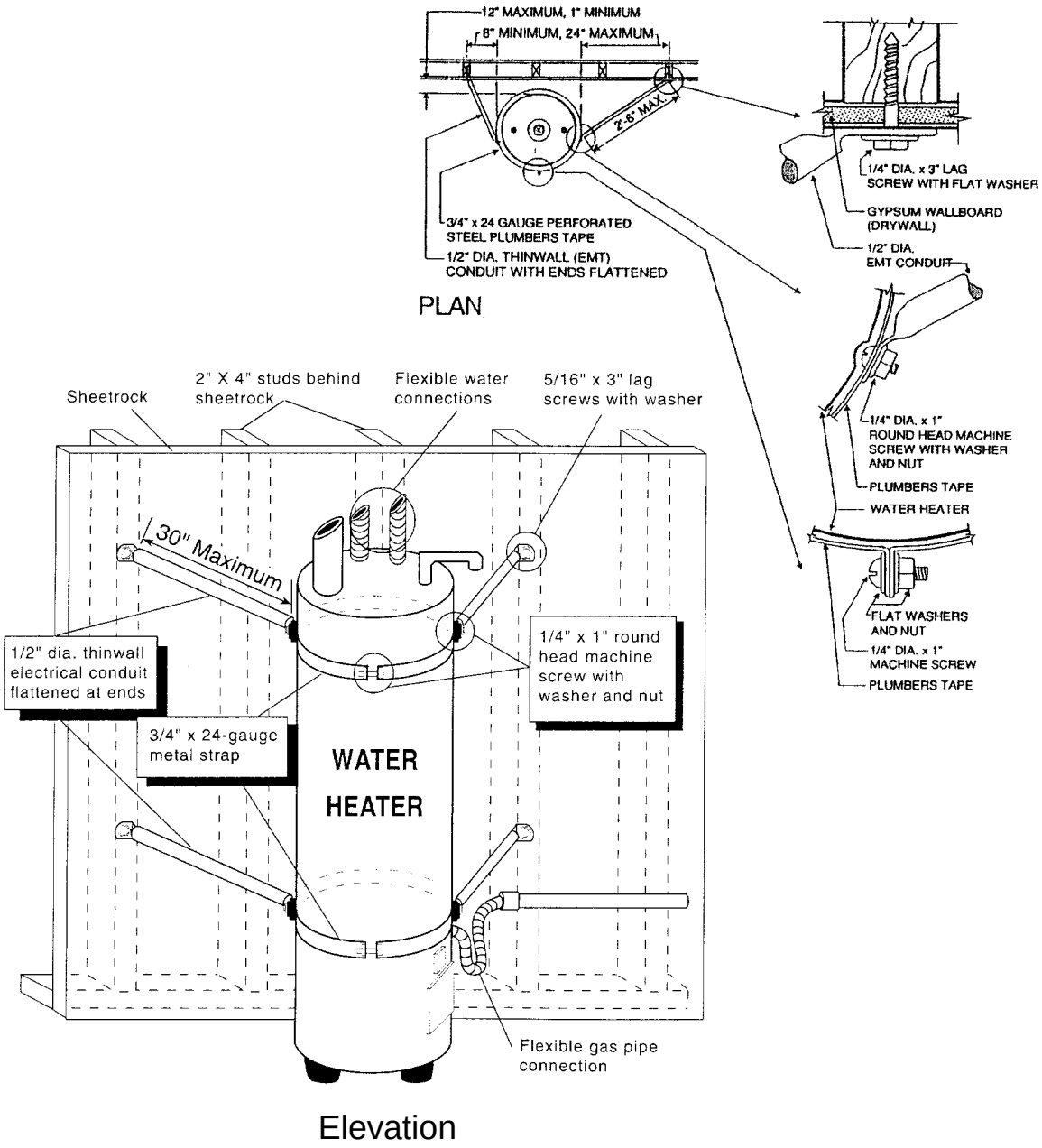

Figure N2-47 Typical bracing of a water heater on the ground floor

2.10 Electrical: Interior Lights

2.10.1 Issues and Concerns

This section considers the requirements for seismic restraint of interior lighting. See Figures N2-48 through N2-51. The concern with interior lighting is two-fold. First, overhead lighting is common in every structure intended for human occupation. The fixtures are heavy enough to injure people if they fall, or to damage other nonstructural components if they hit them, which can be even more hazardous. Second, emergency lighting is intended to function after an earthquake and its failure could be a hazard to both the building occupants and emergency personal.

2.10.2 Discussion

It has been observed in recent earthquakes that recessed and surface-mounted fixtures, when improperly supported, can cause the entire ceiling to fail. This is not only an obvious hazard to people, but it can be a greater emergency if the fallen ceiling blocks an exit or otherwise prevents safe evacuation of a building.

Pendant-type fixtures have the ability to swing freely during an earthquake. The main hazard of these types of lights is that they can hit anything which is nearby, and "explode." Also, if their hangers are not designed to swing, their vertical support could fail.

Recessed and surface mounted fixtures are supported by the ceiling.

They must be attached to the main runners of the ceiling support system and not supported by furring, cross runners or nailing bars. Where the fixtures do not align with the main runners, additional members must be provided. The fixtures must be directly attached to the ceiling system to prevent the light fixture from pounding against the ceiling when they swing under earthquake motion. The attachment must be through bolts, screws or positive clamping devices which can be tightened down. Open hooks, clips, or spring loaded clamps are not acceptable.

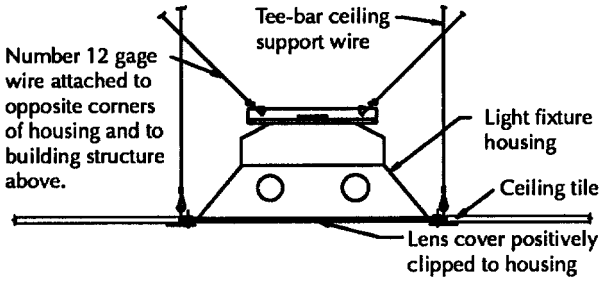

Figure N2-48 Lay-in fluorescent light fixture

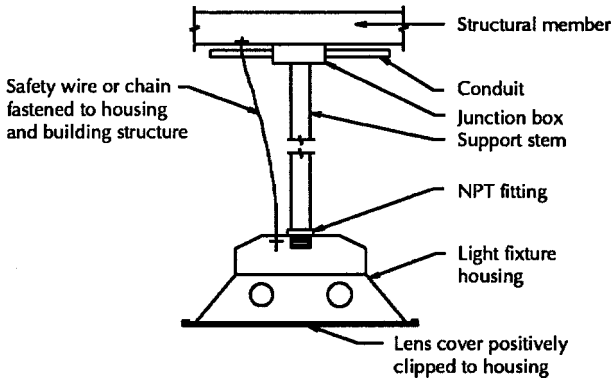

Figure N2-49 Stem-hung fluorescent light fixture

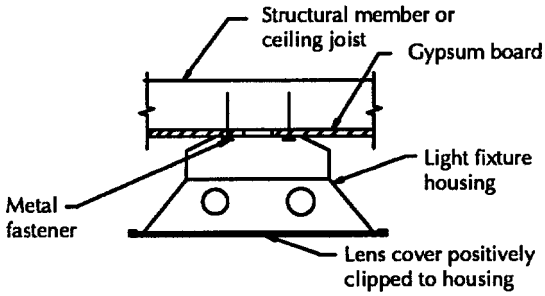

Figure N2-50 Surface-mounted fluorescent light fixture

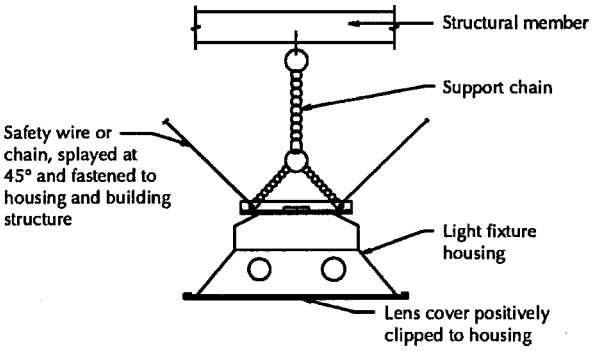

Figure N2-51 Chain-hung fluorescent light fixture

All recessed fixtures must have additional safety supports which attach to the structure above. Typically these are two slack 12ga wires attached to the fixture at opposite corners. At incandescent fixtures only one wire is required to prevent the fixture from falling. At surface mounted fixtures, the main runners must have hanger wire supports located within 6 inches of the fixture's support points. Where additional members have been provided to support the fixture, the support wires should be located on the main runner within 6 inches from where the added members are attached to the main runners.

Lightweight plastic panel diffusers may be of the lay-in type, but the old fashioned, and heavier, diffusers must be positively attached to the fixture with a locking device which cannot slip.

Pendant light fixtures are inherently susceptible to damage from earthquakes. They are usually provided with ball joints at the ceiling to prevent the hanger from being damaged from the fixture swinging during an earthquake. However, earthquakes produce vertical movements as well. Older fixtures may not have any resistance to vertical motions and as a result may allow the fixture to bounce up and down which results in much higher forces on the mounting plate.

Older pendant light fixtures can be retrofitted with safety cables. This will not prevent the mountings from failing but will prevent them from falling. The safety cables must be attached to the main ceiling runners. Cables attached to the fixture mounting plate are not acceptable.

The areas of unacceptable performance of pendant light fixtures are often beyond the designer's control. However, the specification of new pendant fixtures is under their control and there are certain features which should be specified. Acceptable pendant fixtures will have been designed for 1.0g load by the manufacturer. The fixtures will not be suspended from electrical wires. Metal conduit having a wall thickness not less than that of rigid conduit (0.109 inches) or chain will be used to suspend the fixture from the mounting plate. Where metal conduit is used ball joints must be used and the ball joints must be restrained from upward movement. This can be accomplished by using a spring loaded cup on the top of the ball so it will press against the bottom of the mounting plate.

As with recessed and surface-mounted fixtures, a support wire should be located on the main runner within 6 inches of the pendant mounting.

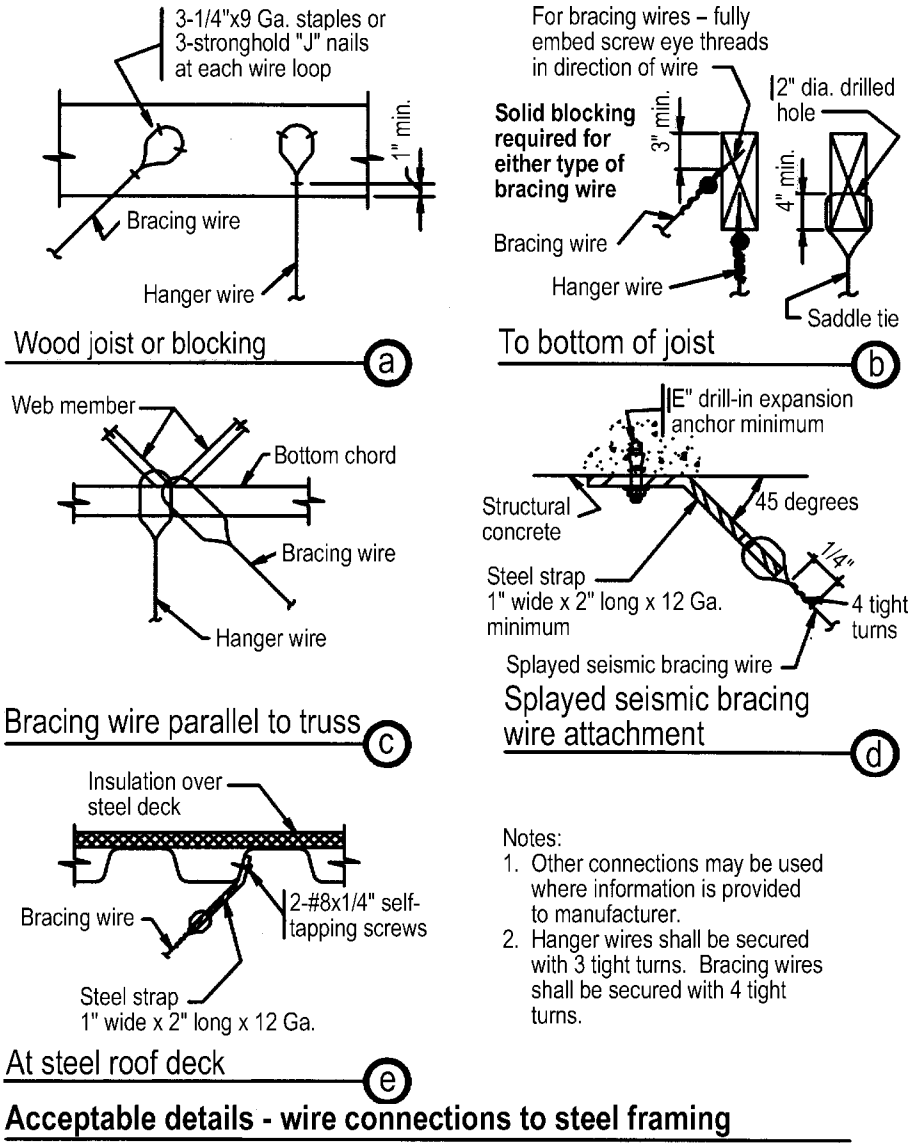

Figure N2-52 Typical wire hanger connection details

Job Aids

Job Aid:
Ceiling Seismic Restraint

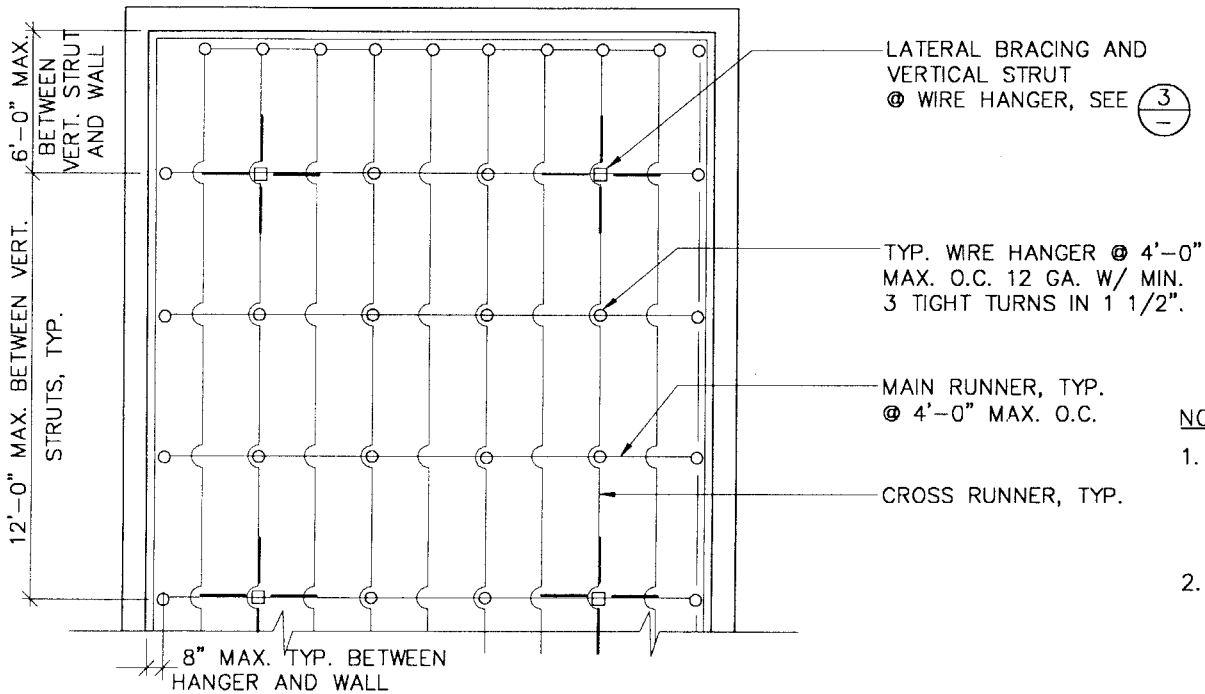

NOTE

1. CONNECT RUNNERS TO NO MORE THAN TWO ADJACENT WALLS. PROVIDE SLIP-JOINT WITH 1/2" SEPARATION AT ALL OTHER WALLS.
2. FOR LIGHT FIXTURE SEE 4/– WHERE OCCURS

TYPICAL LAY-IN PANEL CEILING PLAN

N.T.S.

1/XX

Disclaimer: While the information presented in these details is believed to be correct, the Applied Technology Council, the Structural Engineers Association of California, and the California Seismic Safety Commission assume no responsibility for its accuracy. These details should not be used nor relied upon for any specific application without competent examination and verification of their accuracy, suitability, and applicability by qualified professionals. Users of this information assume all liability arising from such use.

Job Aid:
Ceiling Seismic Restraint

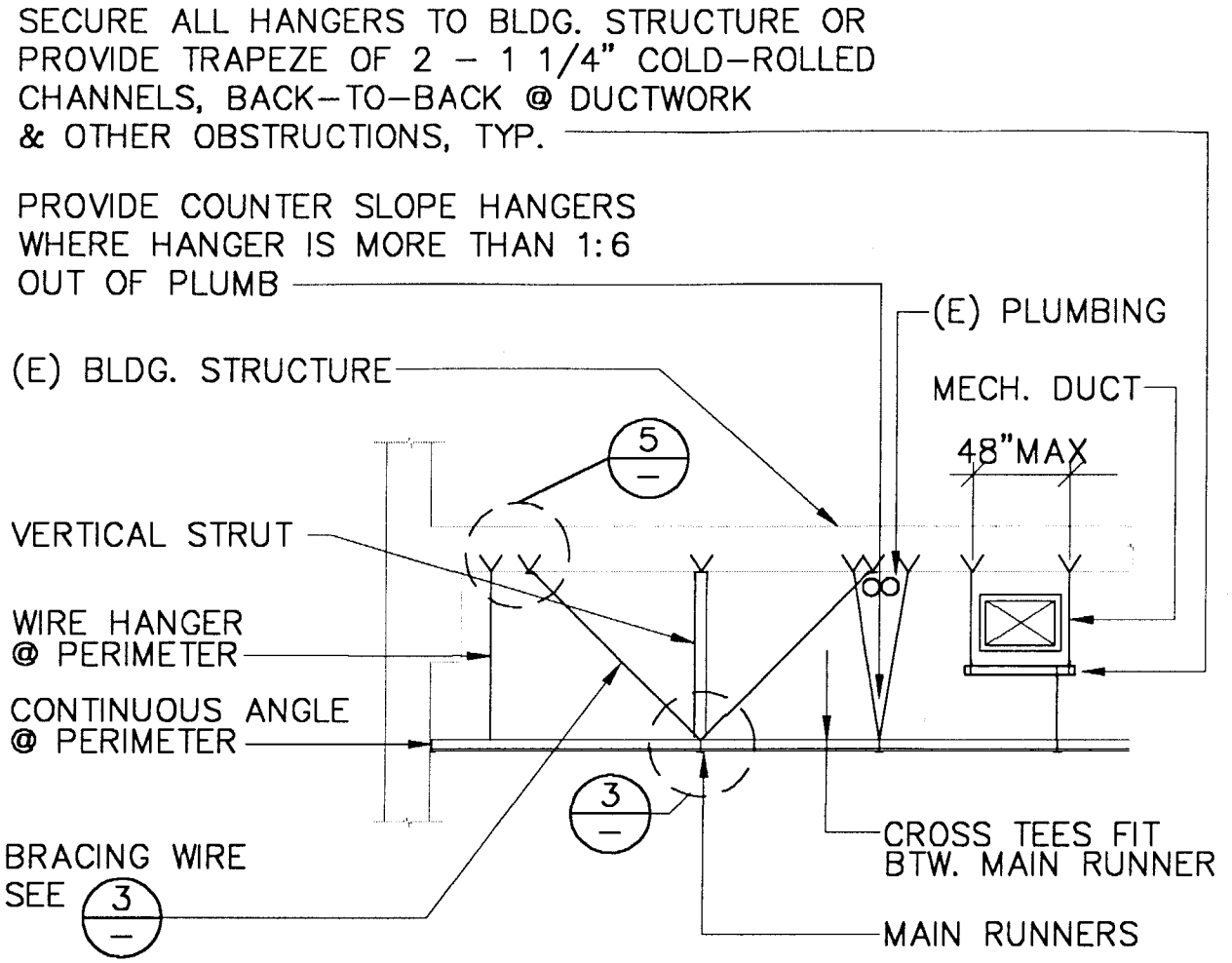

SUSPENDED ACOUS. CLG. LATERAL BRACING (CROSS SECTION)

N.T.S.

2
XX

Disclaimer: While the information presented in these details is believed to be correct, the Applied Technology Council, the Structural Engineers Association of California, and the California Seismic Safety Commission assume no responsibility for its accuracy. These details should not be used nor relied upon for any specific application without competent examination and verification of their accuracy, suitability, and applicability by qualified professionals. Users of this information assume all liability arising from such use.

Job Aid:
Ceiling Seismic Restraint

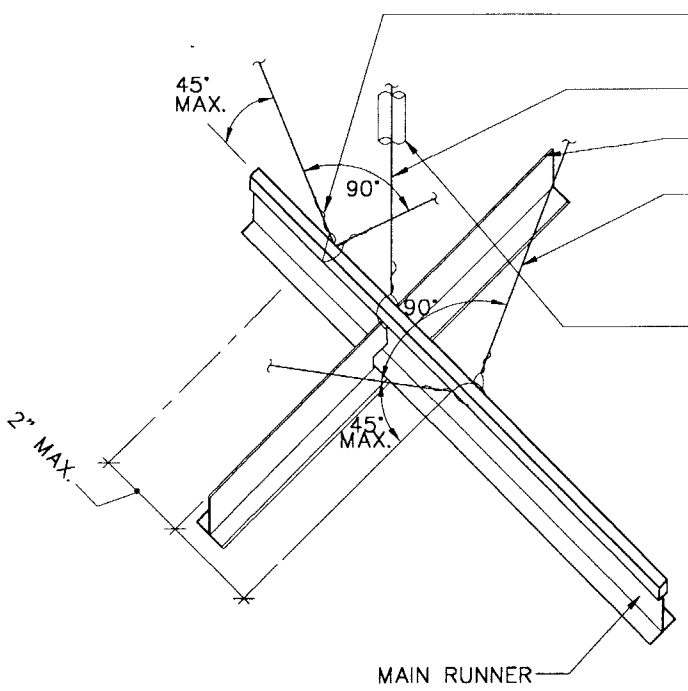

4 TIGHT TURNS MIN. WITHIN 1 1/2" AT EACH END OF DIAGONAL WIRE, TYP.

12 GA VERTICAL WIRE HANGER

CROSS RUNNER

11 GA. MIN. WIRE BRACING, TYP. IN 4 DIRECTIONS, KEEP 6" CLEAR OF ANY UNBRACED HORIZONTAL PIPING OR DUCTWORK

PROVIDE VERTICAL STRUT– ELECTRICAL METALLIC TUBING (EMT) SLIPPED OVER VERTICAL SUSPENDER WIRE AND CUT TO FIT SNUGLY AGAINST BOTH SUPPORTING STRUCTURE ABOVE AND CEILING RUNNER BELOW. AS FOLLOWS:

EMTø	MAX. LENGTH
3/4"	5'–2"
1"	6'–2"
1 1/4"	8'–6"

OR UP TO 6' 8" USE: 3 1/2" X 1 1/4" 25 GA STEEL STUD ATTACHED TO RUNNER WITH 2–#10 SCREWS AND STRUCTURE ABOVE WITH 3/16" DIAMETER POWDER DRIVEN PIN OR 2–#10 SCREWS

SUSPENDED ACOUSTICAL CEILING LATERAL BRACING

N.T.S.

3
XX

Disclaimer: While the information presented in these details is believed to be correct, the Applied Technology Council, the Structural Engineers Association of California, and the California Seismic Safety Commission assume no responsibility for its accuracy. These details should not be used nor relied upon for any specific application without competent examination and verification of their accuracy, suitability, and applicability by qualified professionals. Users of this information assume all liability arising from such use.

Job Aid:
Ceiling Seismic Restraint

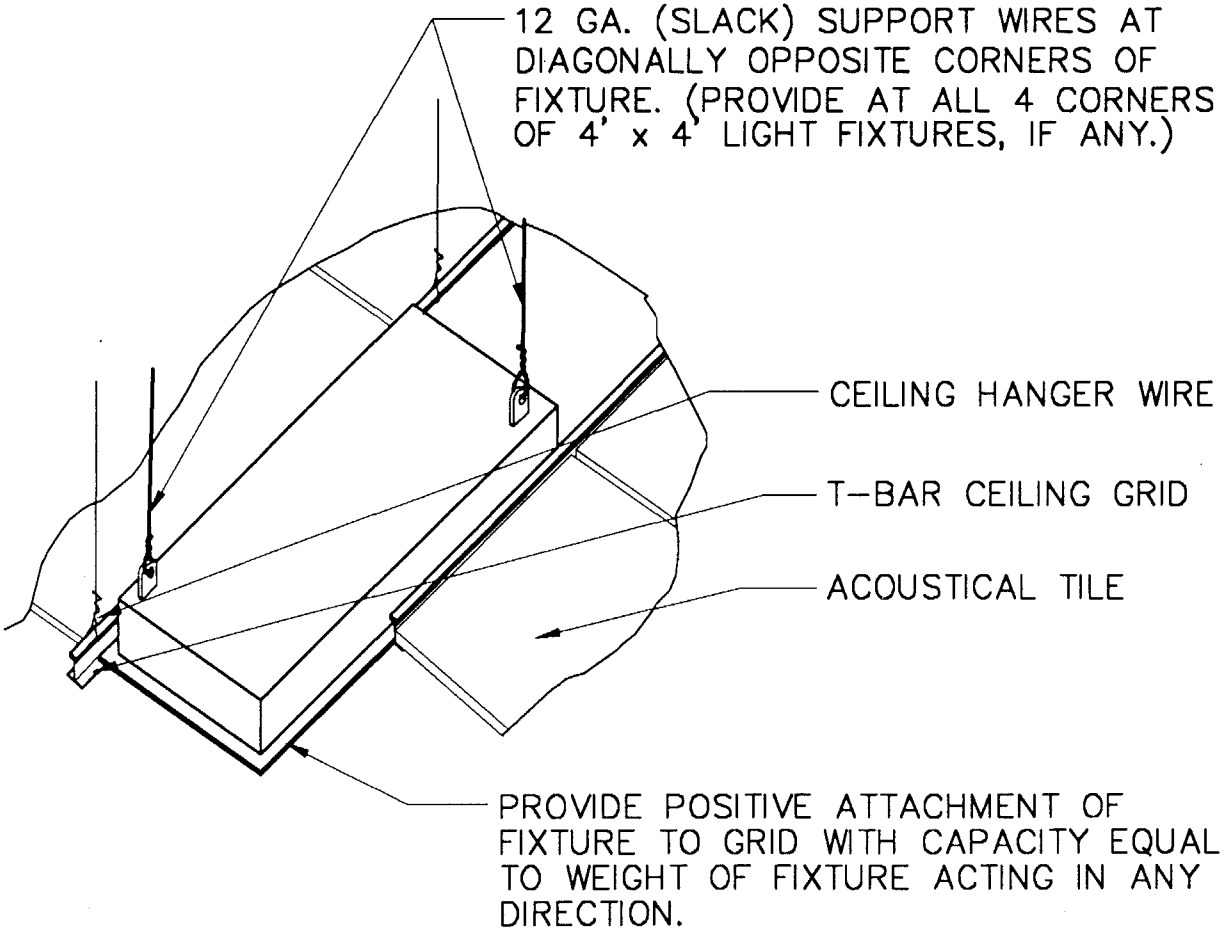

NOTE

1. FOR WEIGHT LESS THAN 56 LBS. ONLY. CONTACT ARCHITECT IF FIXTURE WEIGHS MORE THAN 56 LBS.

LIGHTING OR MECH. FIXTURE

N.T.S.

4
XX

Disclaimer: While the information presented in these details is believed to be correct, the Applied Technology Council, the Structural Engineers Association of California, and the California Seismic Safety Commission assume no responsibility for its accuracy. These details should not be used nor relied upon for any specific application without competent examination and verification of their accuracy, suitability, and applicability by qualified professionals. Users of this information assume all liability arising from such use.

Job Aid:
Ceiling Seismic Restraint

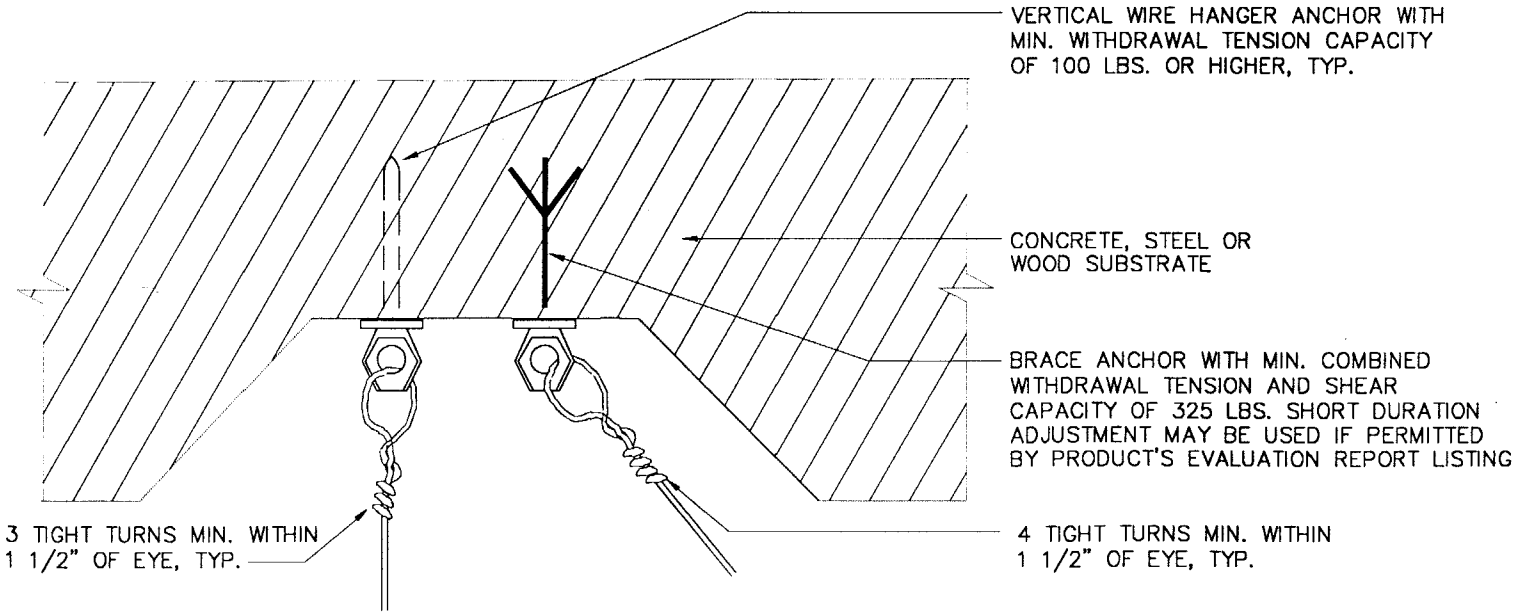

HANGER ATTACHMENT

N.T.S.

5
XX

Disclaimer: While the information presented in these details is believed to be correct, the Applied Technology Council, the Structural Engineers Association of California, and the California Seismic Safety Commission assume no responsibility for its accuracy. These details should not be used nor relied upon for any specific application without competent examination and verification of their accuracy, suitability, and applicability by qualified professionals. Users of this information assume all liability arising from such use.

Job Aid:
Ceiling Seismic Restraint

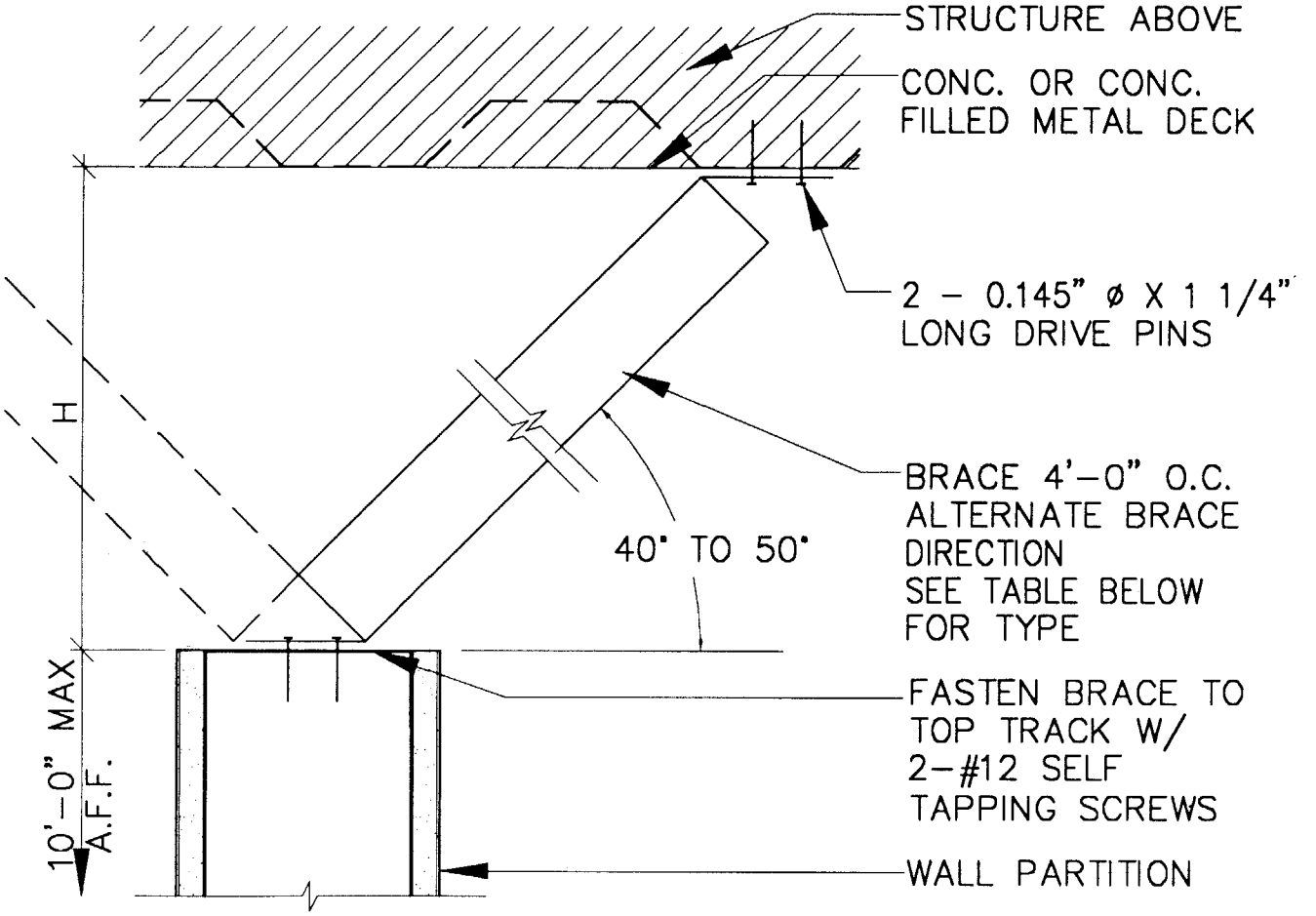

HEIGHT TO STRUCTURE (H)	BRACE SIZE
UP TO 4'–9"	3 5/8" X 1 1/4" X 25 GA STL STUD
4'–9" TO 7'–4"	3 5/8" X 1 1/4" X 20 GA STL STUD

PARTITION BRACE

3"= 1'–0"

6
XX

Disclaimer: While the information presented in these details is believed to be correct, the Applied Technology Council, the Structural Engineers Association of California, and the California Seismic Safety Commission assume no responsibility for its accuracy. These details should not be used nor relied upon for any specific application without competent examination and verification of their accuracy, suitability, and applicability by qualified professionals. Users of this information assume all liability arising from such use.

Job Aid:
Nonstructural Component Sesimic Resistance Responsibilitiy Matrix

	Who is Responsible for:																	
	Design				Design Review					Installation				Observation				
Type of Nonstructural Component or System																		
■ Access Floor (raised)																		
■ Ceilings																		
Suspended T-bar																		
Gypsum Board (hung)																		
■ Electrical Equipment																		
Busduct / Cable Trays																		
Power Generator																		
Light fixtures																		
Main Service Panel																		
Transformers																		
■ Elevator																		
Cable guides																		
■ Escalator																		
■ Exterior Cladding:																		
EIFS																		
GFRC																		
Metal Panels																		
Precast Concrete																		
■ Exterior Window Walls																		
■ Fire Sprinkler System																		
■ Fluid Tanks																		
■ Mechanical Equipment																		
Air Handlers																		
Boilers																		
Chillers																		
Cooling Tower																		
Condensers																		
Ductwork / VAV box																		
Fans																		
Furnaces																		
Piping Systems																		
Pumps																		
■ Interior Partitions																		
■ Other Equipment																		
■ Stairs																		
■ Storage Racks																		
■ Veneer																		
Brick																		
Stone																		
■ Water Heater																		

Seismic Zone 4 Ceiling Bracing Calculation Based on 1997 UBC Sections 1632.2 and 1632.5 for Standard Occupancy Buildings (Category 4 of UBC Table 16-K)

$$F_p = \frac{a_p C_a I_p}{R_p}\left[1 + 3\frac{h_x}{h_r}\right]W_p \quad \text{(Equation 32-2)}$$

Where:

a_p = 1.0 (per Table 16-O)

I_p = 1.0 (per Table 16-K)

C_a = $0.44N_a$ (per Table 16-Q, assuming Soil Profile Type SD)

(N_a varies depending on location with respect to nearest fault source and source type)

R_p = 3.0 (per Table 16-O)

h_x = ceiling height above grade

h_r = height of roof above grade

h_x/h_r is assumed to be 0.95 for a top story ceiling location

W_p = 4 psf x 144 square feet tributary area to each bracing point = 576 pounds (ceiling weight is assumed to be 4 psf per footnote 6 of Table 16-O)

$$F_p = \frac{1.0 \times 0.44 \times 1.0}{3.0}[1 + 3(0.95)]576 = 0.1467 \times 3.85 \times 576 = 325 \text{ pounds} = E$$

(assuming N_a = 1.0; C_a = 0.44)

Using Load Combination Equation 12-13 to determine Allowable Stress Design (ASD) force:

D + L + E/1.4**;** where dead and live loads are 0, because vertical load hangers are separately provided;

Using Equation 30-1:

$$E_{(\text{ASD})} = E_h + E_v, \text{ where } E_v = 0, E_{(\text{ASD})} = E_h$$

$$F_{p(\text{ASD})} = \frac{E_h}{1.4} = \frac{325}{1.4} = 232 \text{ pounds (horizontal force)}$$

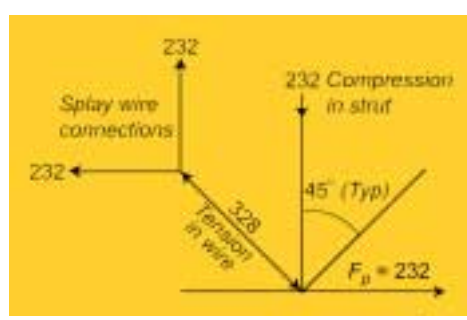

Determine tension force in diagonal wire installed at 45° from horizontal:

232 pounds horizontal force × S_2 = 328 pounds tension

Cross sectional area of 12 gage wire:

$\pi r^2 = 3.14 \times [0.1055 / 2]^2 = 0.00874$ square inches

$f_{t(\text{of wire})} = 328 / 0.00874 = 37.52$ ksi $< F_t = 0.06\ (50\text{ksi})\ (1.33) = 40.0$ ksi OK!

If the building is located in a Near Source location where $N_a = 1.33$, $C_a\ N_a = 0.585$:

$F_p = 0.585 / 3.0 \times 3.85 \times 576 = 433$ pounds; $F_{p(\text{ASD})} = 433/ 1.4 = 309$ pounds

Tension force in wire = 309 × S_2 = 437 pounds ∴ $f_{t\ (\text{of wire})} = 437 / 0.00874 = 49.99$ ksi

Conclusion: UBC Standard 25-2 prescriptive bracing, using 4 - 12 gage splay wires installed at 45^0 from horizontal at a spacing not exceeding 12 feet on center may be used for suspended ceilings of Standard Occupancy buildings (I_p=1.0) in Seismic Zone 4, where maximum value of the near source factor coefficient N_a, is 1.33 or less.

Table of Contents - Appendices

Appendix A: Project Participants ---------- A-1

Appendix B: Applied Technology Council Projects and Report Information ---------- B-1

Appendix A: Project Participants

Seismic Safety Continuing Education of Building Design and Code Enforcement Professionals Project

Proposition 122 Seismic Retrofit Practices Improvement Program, Product 4-1

ATC/SEAOC Joint Venture

Mr. Christopher Rojahn (Project Manager)
Applied Technology Council
555 Twin Dolphin Drive, Suite 550
Redwood City, CA 94065

Mr. Allen Goldstein (Deputy Project Manager)
Structural Engineers Association of Calif.
555 University Avenue, Suite 126
Sacramento, CA 95825

Mr. James Russell
(Curriculum Development Manager)
3654 Sun View Way
Concord, CA 94520

California Seismic Safety Commission

Mr. Henry Reyes (Project Officer)
California Seismic Safety Commission
1755 Creekside Oaks Drive, Suite 100
Sacramento, CA 95833

Technical Advisory Panel

Mr. Donald Clark
Building and Planning Official
1401 Draper Street
Kingsburg, CA 93631

Mr. Gary McGavin
McGavin Architecture
302 Brookside Avenue, Suite D
Redlands, CA 92373

Mr. Richard J. Phillips
Hillman Biddison & Loevenguth
1212 S. Flower Street, 3rd Floor
Los Angeles, CA 90015

Mr. Scott Stedman
1364 Paseo Ladera Lane
Arroyo Grande, CA 93420-5053

Mr. Tim Steenson
City of Banning
Building and Safety
99 East Ramsey Street

Mr. Eric M. Tolles
Community Development Department
City of Irvine
1 Civic Center Plaza
Irvine, CA 92713

Consultants

Mr. Eric D. Brown
Hillman, Biddison & Loevenguth
1212 South Flower Street, 3rd Floor
Los Angeles, CA 90015

Ms. Kelly Cobeen

GFDS Engineers
675 Davis Street
San Francisco, CA 94111-1903

Mr. Craig Comartin
ATC Senior Structural Consultant
7683 Andrea Avenue
Stockton, CA 95207-1705

Mr. Richard M. Drake
Fluor Daniel
3353 Michelson Drive
Irvine, CA 92698

Mr. Timothy McCormick
City of Santa Monica
1685 Main Street
Santa Monica, CA 90407

Mr. Evan Reis
Comartin-Reis Engineers
260 Sheridan Avenue, Suite 150
Palo Alto, CA 94360

Dr. Kit Wong
Vickerman-Zachary-Miller/Transystems
180 Grand Avenue, Suite 400
Oakland, CA 94612

Mr. Ryan T. Yee
Instructional Engineering, Inc.
1812 Mt. Darwin Court
Antioch, CA 94509

California Seismic Safety Commission Oversight Panel

Mr. Lowell Shields, Chairman
Capital Engineering Consultants
7300 Folsom Blvd., Suite 100
Sacramento, CA 95826

Mr. Ross Daniel Cranmer
City of Huntington Beach
2000 Main Street
Huntington Beach, CA 92648

Mr. William Gates
Dames & Moore
911 Wilshire Blvd., Suite 700
Los Angeles, CA 90017

Mr. Robert Hamilton
Associated General Contractors
3095 Beacon Blvd.
West Sacramento, California 95691

Mr. Frederick M. Herman
City of Palo Alto
250 Hamilton
Palo Alto, CA 94303

Prof. Wilfred Iwan
Earthquake Engineering Research Lab.
California Institute of Technology
Pasadena, CA 91125

Mr. Roy G. Johnston
Brandow & Johnston Associates
1660 West 3rd Street
Los Angeles, CA 9017

David Martinez
City of Big Bear Lake
P.O. Box 10,000
Big Bear Lake, California 92315

Mr. Frank McClure
Consulting Engineer
54 Sleepy Hollow Lane
Orinda, CA 94563

Mr. Joel A. McRonald
Real Estate Services Division
Professional Services Branch
1300 I Street, 7th Floor
Sacramento, CA 95814

Steve Patterson
City of Chino Hills
2001 Grand Avenue
Chino Hills, California 91709

Mr. Stuart Posselt

Building Standards Commission
1130 K Street, Suite 101
Sacramento, CA 95814-3927

Mr. Daniel Shapiro
SOHA Engineers
550 Kearny Street, Suite 200
San Francisco, CA 94108-2527

Ms. Patricia Snyder, ex officio, Chair
Seismic Safety Commission
Sacramento, California 95814

Mr. Fred Turner, ex officio
Seismic Safety Commission
1755 Creekside Oaks Dr., Suite 100
Sacramento, CA 95833

Appendix B:

Applied Technology Council
Advancing Engineering Applications for Natural Hazard Mitigation

PURPOSE AND ORGANIZATION

Applied Technology Council (ATC) is an independent, nonprofit, tax-exempt corporation established in 1971 through the efforts of the Structural Engineers Association of California. ATC's mission is to develop state-of-the-art, user-friendly engineering resources and applications for use in mitigating the effects of natural and other hazards on the built environment. ATC also identifies and encourages needed research and develops consensus opinions on structural engineering issues in a non-proprietary format. ATC thereby fulfills a unique role in funded information transfer.

ATC is guided by a Board of Directors consisting of representatives appointed by the American Society of Civil Engineers, the Structural Engineers Association of California, the National Council of Structural Engineers Associations, the Western Council of Structural Engineers Associations, and four at-large representatives concerned with the practice of structural engineering. Each Director serves a three-year term.

Project management and administration are carried out by a full-time Executive Director and support staff. ATC calls upon a wide range of highly qualified professionals as consultants on specific projects, thus incorporating the experience of many individuals from academia, research and professional practice who would not be available from a single organization.

The ATC Corporate Headquarters are located in Redwood City, California, 25 miles south of San Francisco, which allows easy access to the University of California, Berkeley, Stanford University, and the U. S. Geological Survey, Menlo Park, libraries. In-house equipment capabilities include a network of state-of-the-art pentium-chip personal computers, scanning devices, and other peripherals.

PROJECTS & REPORT INFORMATION

One of the primary purposes of Applied Technology Council is to develop resource documents that translate and summarize useful information to practicing engineers. This includes the development of guidelines and manuals, as well as the development of research recommendations for specific areas determined by the profession. ATC is not a code development organization, although several of the ATC project reports serve as resource documents for the development of codes, standards and specifications.

Applied Technology Council conducts projects that meet the following criteria:

1. The primary audience or benefactor is the design practitioner in structural engineering.
2. A cross section or consensus of engineering opinion is required to be obtained and presented by a neutral source.
3. The project fosters the advancement of structural engineering practice.

A brief description of several major completed projects and reports is given in the following section. Funding for projects is obtained from government agencies and tax-deductible contributions from the private sector.

ATC-1: This project resulted in five papers that were published as part of *Building Practices for Disaster Mitigation, Building Science Series 46*, proceedings of a workshop sponsored by the National Science Foundation (NSF) and the National Bureau of Standards (NBS). Available through the National Technical Information Service (NTIS), 5285 Port Royal Road, Springfield, VA 22151, as NTIS report No. COM-73-50188.

ATC-2: The report, *An Evaluation of a Response Spectrum Approach to Seismic Design of Buildings*, was funded by NSF and NBS and was conducted as part of the Cooperative Federal Program in Building Practices for Disaster Mitigation. Available through the ATC office. (Published 1974, 270 Pages)

ABSTRACT: This study evaluated the applicability and cost of the response spectrum approach to seismic analysis and design that was proposed by various segments of the engineering profession. Specific building designs, design procedures and parameter values were evaluated for future application. Eleven existing buildings of varying dimensions were redesigned according to the procedures.

ATC-3: The report, *Tentative Provisions for the Development of Seismic Regulations for Buildings* (ATC-3-06), was funded by NSF and NBS. The second printing of this report, which includes proposed amendments, is available through the ATC office. (Published 1978, amended 1982, 505 pages plus proposed amendments)

ABSTRACT: The tentative provisions in this document represent the results of a concerted effort by a multi-disciplinary team of 85 nationally recognized experts in earthquake engineering. The provisions serve as the basis for the seismic provisions of the 1988 *Uniform Building Code* and the 1988 and subsequent issues of the *NEHRP Recommended Provisions for the Development of Seismic Regulation for New Buildings*. The second printing of this document contains proposed amendments prepared by a joint committee of the Building Seismic Safety Council (BSSC) and the NBS.

ATC-3-2: The project, Comparative Test Designs of Buildings Using ATC-3-06 Tentative Provisions, was funded by NSF. The project consisted of a study to develop and plan a program for making comparative test designs of the ATC-3-06 Tentative Provisions. The project report was written to be used by the Building Seismic Safety Council in its refinement of the ATC-3-06 Tentative Provisions.

ATC-3-4: The report, *Redesign of Three Multistory Buildings: A Comparison Using ATC-3-06 and 1982 Uniform Building Code Design Provisions*, was published under a grant from NSF. Available through the ATC office. (Published 1984, 112 pages)

ABSTRACT: This report evaluates the cost and technical impact of using the 1978 ATC-3-06 report, *Tentative Provisions for the Development of Seismic Regulations for Buildings*, as amended by a joint committee of the Building Seismic Safety Council and the National Bureau of Standards in 1982. The evaluations are based on studies of three existing California buildings redesigned in accordance with the ATC-3-06 Tentative Provisions and the 1982 *Uniform Building Code*. Included in the report are recommendations to code implementing bodies.

ATC-3-5: This project, Assistance for First Phase of ATC-3-06 Trial Design Program Being Conducted by the Building Seismic Safety Council, was funded by the Building Seismic Safety Council to provide the services of the ATC Senior Consultant and other ATC personnel to assist the BSSC in the conduct of the first phase of its Trial Design Program. The first phase provided for trial designs conducted for buildings in Los Angeles, Seattle, Phoenix, and Memphis.

ATC-3-6: This project, Assistance for Second Phase of ATC-3-06 Trial Design Program Being Conducted by the Building Seismic Safety Council, was funded by the Building Seismic Safety Council to provide the services of the ATC Senior Consultant and other ATC personnel to assist the BSSC in the conduct of the second phase of its Trial Design Program. The second phase provided for trial designs conducted for buildings in New York, Chicago, St. Louis, Charleston, and Fort Worth.

ATC-4: The report, *A Methodology for Seismic Design and Construction of Single-Family Dwellings*, was published under a contract with the Department of Housing and Urban Development (HUD). Available through the ATC office. (Published 1976, 576 pages)

ABSTRACT: This report presents the results of an in-depth effort to develop design and construction details for single-family residences that minimize the potential economic loss and life-loss risk associated with earthquakes. The report: (1) discusses the ways structures behave when subjected to

seismic forces, (2) sets forth suggested design criteria for conventional layouts of dwellings constructed with conventional materials, (3) presents construction details that do not require the designer to perform analytical calculations, (4) suggests procedures for efficient plan-checking, and (5) presents recommendations including details and schedules for use in the field by construction personnel and building inspectors.

ATC-4-1: The report, *The Home Builders Guide for Earthquake Design*, was published under a contract with HUD. Available through the ATC office. (Published 1980, 57 pages)

ABSTRACT: This report is an abridged version of the ATC-4 report. The concise, easily understood text of the Guide is supplemented with illustrations and 46 construction details. The details are provided to ensure that houses contain structural features that are properly positioned, dimensioned and constructed to resist earthquake forces. A brief description is included on how earthquake forces impact on houses and some precautionary constraints are given with respect to site selection and architectural designs.

ATC-5: The report, *Guidelines for Seismic Design and Construction of Single-Story Masonry Dwellings in Seismic Zone 2*, was developed under a contract with HUD. Available through the ATC office. (Published 1986, 38 pages)

ABSTRACT: The report offers a concise methodology for the earthquake design and construction of single-story masonry dwellings in Seismic Zone 2 of the United States, as defined by the 1973 *Uniform Building Code*. The Guidelines are based in part on shaking table tests of masonry construction conducted at the University of California at Berkeley Earthquake Engineering Research Center. The report is written in simple language and includes basic house plans, wall evaluations, detail drawings, and material specifications.

ATC-6: The report, *Seismic Design Guidelines for Highway Bridges*, was published under a contract with the Federal Highway Administration (FHWA). Available through the ATC office. (Published 1981, 210 pages)

ABSTRACT: The Guidelines are the recommendations of a team of sixteen nationally recognized experts that included consulting engineers, academics, state and federal agency representatives from throughout the United States. The Guidelines embody several new concepts that were significant departures from then existing design provisions. Included in the Guidelines are an extensive commentary, an example demonstrating the use of the Guidelines, and summary reports on 21 bridges redesigned in accordance with the Guidelines. The guidelines have been adopted by the American Association of Highway and Transportation Officials as a guide specification.

ATC-6-1: The report, *Proceedings of a Workshop on Earthquake Resistance of Highway Bridges*, was published under a grant from NSF. Available through the ATC office. (Published 1979, 625 pages)

ABSTRACT: The report includes 23 state-of-the-art and state-of-practice papers on earthquake resistance of highway bridges. Seven of the twenty-three papers were authored by participants from Japan, New Zealand and Portugal. The Proceedings also contain recommendations for future research that were developed by the 45 workshop participants.

ATC-6-2: The report, *Seismic Retrofitting Guidelines for Highway Bridges*, was published under a contract with FHWA. Available through the ATC office. (Published 1983, 220 pages)

ABSTRACT: The Guidelines are the recommendations of a team of thirteen nationally recognized experts that included consulting engineers, academics, state highway engineers, and federal agency representatives. The Guidelines, applicable for use in all parts of the United States, include a preliminary screening procedure, methods for evaluating an existing bridge in detail, and potential retrofitting measures for the most common seismic deficiencies. Also included are special design requirements for various retrofitting measures.

ATC-7: The report, *Guidelines for the Design of Horizontal Wood Diaphragms*, was published under a grant from NSF. Available through the ATC office. (Published 1981, 190 pages)

ABSTRACT: Guidelines are presented for designing roof and floor systems so these can function as horizontal diaphragms in a lateral force resisting system. Analytical procedures, connection details and design examples are included in the Guidelines.

ATC-7-1: The report, *Proceedings of a Workshop of Design of Horizontal Wood Diaphragms*, was published under a grant from NSF. Available through the ATC office. (Published 1980, 302 pages)

ABSTRACT: The report includes seven papers on state-of-the-practice and two papers on recent research. Also included are recommendations for future research that were developed by the 35 workshop participants.

ATC-8: This report, *Proceedings of a Workshop on the Design of Prefabricated Concrete Buildings for Earthquake Loads*, was funded by NSF. Available through the ATC office. (Published 1981, 400 pages)

ABSTRACT: The report includes eighteen state-of-the-art papers and six summary papers. Also included are recommendations for future research that were developed by the 43 workshop participants.

ATC-9: The report, *An Evaluation of the Imperial County Services Building Earthquake Response and Associated Damage*, was published under a grant from NSF. Available through the ATC office. (Published 1984, 231 pages)

ABSTRACT: The report presents the results of an in-depth evaluation of the Imperial County Services Building, a 6-story reinforced concrete frame and shear wall building severely damaged by the October 15, 1979 Imperial Valley, California, earthquake. The report contains a review and evaluation of earthquake damage to the building; a review and evaluation of the seismic design; a comparison of the requirements of various building codes as they relate to the building; and conclusions and recommendations pertaining to future building code provisions and future research needs.

ATC-10: This report, *An Investigation of the Correlation Between Earthquake Ground Motion and Building Performance*, was funded by the U.S. Geological Survey (USGS). Available through the ATC office. (Published 1982, 114 pages)

ABSTRACT: The report contains an in-depth analytical evaluation of the ultimate or limit capacity of selected representative building framing types, a discussion of the factors affecting the seismic performance of buildings, and a summary and comparison of seismic design and seismic risk parameters currently in widespread use.

ATC-10-1: This report, *Critical Aspects of Earthquake Ground Motion and Building Damage Potential*, was co-funded by the USGS and the NSF. Available through the ATC office. (Published 1984, 259 pages)

ABSTRACT: This document contains 19 state-of-the-art papers on ground motion, structural response, and structural design issues presented by prominent engineers and earth scientists in an ATC seminar. The main theme of the papers is to identify the critical aspects of ground motion and building performance that currently are not being considered in building design. The report also contains conclusions and recommendations of working groups convened after the Seminar.

ATC-11: The report, *Seismic Resistance of Reinforced Concrete Shear Walls and Frame Joints: Implications of Recent Research for Design Engineers*, was published under a grant from NSF. Available through the ATC office. (Published 1983, 184 pages)

ABSTRACT: This document presents the results of an in-depth review and synthesis of research reports pertaining to cyclic loading of reinforced concrete shear walls and cyclic loading of joint reinforced concrete frames. More than 125 research reports published since 1971 are reviewed and evaluated in this report. The preparation of the report included a consensus process involving numerous experienced design professionals from throughout the United States. The report contains reviews of current and past design practices, summaries of research developments, and in-depth discussions of design implications of recent research results.

ATC-12: This report, *Comparison of United States and New Zealand Seismic Design Practices for Highway Bridges*, was published under a grant

from NSF. Available through the ATC office. (Published 1982, 270 pages)

ABSTRACT: The report contains summaries of all aspects and innovative design procedures used in New Zealand as well as comparison of United States and New Zealand design practice. Also included are research recommendations developed at a 3-day workshop in New Zealand attended by 16 U.S. and 35 New Zealand bridge design engineers and researchers.

ATC-12-1: This report, *Proceedings of Second Joint U.S.-New Zealand Workshop on Seismic Resistance of Highway Bridges*, was published under a grant from NSF. Available through the ATC office. (Published 1986, 272 pages)

ABSTRACT: This report contains written versions of the papers presented at this 1985 Workshop as well as a list and prioritization of workshop recommendations. Included are summaries of research projects being conducted in both countries as well as state-of-the-practice papers on various aspects of design practice. Topics discussed include bridge design philosophy and loadings; design of columns, footings, piles, abutments and retaining structures; geotechnical aspects of foundation design; seismic analysis techniques; seismic retrofitting; case studies using base isolation; strong-motion data acquisition and interpretation; and testing of bridge components and bridge systems.

ATC-13: The report, *Earthquake Damage Evaluation Data for California*, was developed under a contract with the Federal Emergency Management Agency (FEMA). Available through the ATC office. (Published 1985, 492 pages)

ABSTRACT: This report presents expert-opinion earthquake damage and loss estimates for industrial, commercial, residential, utility and transportation facilities in California. Included are damage probability matrices for 78 classes of structures and estimates of time required to restore damaged facilities to pre-earthquake usability. The report also describes the inventory information essential for estimating economic losses and the methodology used to develop loss estimates on a regional basis.

ATC-14: The report, *Evaluating the Seismic Resistance of Existing Buildings*, was developed under a grant from the NSF. Available through the ATC office. (Published 1987, 370 pages)

ABSTRACT: This report, written for practicing structural engineers, describes a methodology for performing preliminary and detailed building seismic evaluations. The report contains a state-of-practice review; seismic loading criteria; data collection procedures; a detailed description of the building classification system; preliminary and detailed analysis procedures; and example case studies, including nonstructural considerations.

ATC-15: The report, *Comparison of Seismic Design Practices in the United States and Japan*, was published under a grant from NSF. Available through the ATC office. (Published 1984, 317 pages)

ABSTRACT: The report contains detailed technical papers describing design practices in the United States and Japan as well as recommendations emanating from a joint U.S.-Japan workshop held in Hawaii in March, 1984. Included are detailed descriptions of new seismic design methods for buildings in Japan and case studies of the design of specific buildings (in both countries). The report also contains an overview of the history and objectives of the Japan Structural Consultants Association.

ATC-15-1: The report, *Proceedings of Second U.S.-Japan Workshop on Improvement of Building Seismic Design and Construction Practices*, was published under a grant from NSF. Available through the ATC office. (Published 1987, 412 pages)

ABSTRACT: This report contains 23 technical papers presented at this San Francisco workshop in August, 1986, by practitioners and researchers from the U.S. and Japan. Included are state-of-the-practice papers and case studies of actual building designs and information on regulatory, contractual, and licensing issues.

ATC-15-2: The report, *Proceedings of Third U.S.-Japan Workshop on Improvement of Building Structural Design and Construction Practices*, was published jointly by ATC and the Japan Structural Consultants Association. Available

through the ATC office. (Published 1989, 358 pages)

ABSTRACT: This report contains 21 technical papers presented at this Tokyo, Japan, workshop in July, 1988, by practitioners and researchers from the U.S., Japan, China, and New Zealand. Included are state-of-the-practice papers on various topics, including braced steel frame buildings, beam-column joints in reinforced concrete buildings, summaries of comparative U. S. and Japanese design, and base isolation and passive energy dissipation devices.

ATC-15-3: The report, *Proceedings of Fourth U.S.-Japan Workshop on Improvement of Building Structural Design and Construction Practices*, was published jointly by ATC and the Japan Structural Consultants Association. Available through the ATC office. (Published 1992, 484 pages)

ABSTRACT: This report contains 22 technical papers presented at this Kailua-Kona, Hawaii, workshop in August, 1990, by practitioners and researchers from the United States, Japan, and Peru. Included are papers on postearthquake building damage assessment; acceptable earth-quake damage; repair and retrofit of earthquake damaged buildings; base-isolated buildings, including Architectural Institute of Japan recommendations for design; active damping systems; wind-resistant design; and summaries of working group conclusions and recommendations.

ATC-15-4: The report, *Proceedings of Fifth U.S.-Japan Workshop on Improvement of Building Structural Design and Construction Practices*, was published jointly by ATC and the Japan Structural Consultants Association. Available through the ATC office. (Published 1994, 360 pages)

ABSTRACT: This report contains 20 technical papers presented at this San Diego, California workshop in September, 1992. Included are papers on performance goals/acceptable damage in seismic design; seismic design procedures and case studies; construction influences on design; seismic isolation and passive energy dissipation; design of irregular structures; seismic evaluation, repair and upgrading; quality control for design and construction; and summaries of working group discussions and recommendations.

ATC-16: This project, Development of a 5-Year Plan for Reducing the Earthquake Hazards Posed by Existing Nonfederal Buildings, was funded by FEMA and was conducted by a joint venture of ATC, the Building Seismic Safety Council and the Earthquake Engineering Research Institute. The project involved a workshop in Phoenix, Arizona, where approximately 50 earthquake specialists met to identify the major tasks and goals for reducing the earthquake hazards posed by existing nonfederal buildings nationwide. The plan was developed on the basis of nine issue papers presented at the workshop and workshop working group discussions. The Workshop Proceedings and Five-Year Plan are available through the Federal Emergency Management Agency, 500 “C” Street, S.W., Washington, DC 20472.

ATC-17: This report, *Proceedings of a Seminar and Workshop on Base Isolation and Passive Energy Dissipation*, was published under a grant from NSF. Available through the ATC office. (Published 1986, 478 pages)

ABSTRACT: The report contains 42 papers describing the state-of-the-art and state-of-the-practice in base-isolation and passive energy-dissipation technology. Included are papers describing case studies in the United States, applications and developments worldwide, recent innovations in technology development, and structural and ground motion issues. Also included is a proposed 5-year research agenda that addresses the following specific issues: (1) strong ground motion; (2) design criteria; (3) materials, quality control, and long-term reliability; (4) life cycle cost methodology; and (5) system response.

ATC-17-1: This report, *Proceedings of a Seminar on Seismic Isolation, Passive Energy Dissipation and Active Control*, was published under a grant from NSF. Available through the ATC office. (Published 1993, 841 pages)

ABSTRACT: The 2-volume report documents 70 technical papers presented during a two-day seminar in San Francisco in early 1993. Included are invited theme papers and competitively selected papers on issues related to seismic isolation systems, passive energy

dissipation systems, active control systems and hybrid systems.

ATC-18: The report, *Seismic Design Criteria for Bridges and Other Highway Structures: Current and Future***,** was developed under a grant from NCEER and FHWA. Available through the ATC office. (Published, 1997, 151 pages)

ABSTRACT. Prepared as part of a project to develop improved seismic design guidelines for new highway construction, this report reviews current domestic and foreign design practice, philosophy and criteria, and recommends future directions for code development. The project considered bridges, tunnels, abutments, retaining wall structures, and foundations.

ATC-19: The report, *Structural Response Modification Factors* was funded by NSF and NCEER. Available through the ATC office. (Published 1995, 70 pages)

ABSTRACT: This report addresses structural response modification factors (R factors), which are used to reduce the seismic forces associated with elastic response to obtain design forces. The report documents the basis for current R values, how R factors are used for seismic design in other countries, a rational means for decomposing R into key components, a framework (and methods) for evaluating the key components of R, and the research necessary to improve the reliability of engineered construction designed using R factors.

ATC-20: The report, *Procedures for Postearthquake Safety Evaluation of Buildings,* was developed under a contract from the California Office of Emergency Services (OES), California Office of Statewide Health Planning and Development (OSHPD) and FEMA. Available through the ATC office (Published 1989, 152 pages)

ABSTRACT: This report provides procedures and guidelines for making on-the-spot evaluations and decisions regarding continued use and occupancy of earthquake damaged buildings. Written specifically for volunteer structural engineers and building inspectors, the report includes rapid and detailed evaluation procedures for inspecting buildings and posting them as “inspected” (apparently safe), “limited entry” or “unsafe”. Also included are special procedures for evaluation of essential buildings (e.g., hospitals), and evaluation procedures for nonstructural elements, and geotechnical hazards.

ATC-20-1: The report, *Field Manual: Postearthquake Safety Evaluation of Buildings*, was developed under a contract from OES and OSHPD. Available through the ATC office (Published 1989, 114 pages)

ABSTRACT: This report, a companion Field Manual for the ATC-20 report, summarizes the postearthquake safety evaluation procedures in brief concise format designed for ease of use in the field.

ATC-20-2: The report, *Addendum to the ATC-20 Postearthquake Building Safety Procedures* was published under a grant from the NSF and funded by the USGS. Available through the ATC office. (Published 1995, 94 pages)

ABSTRACT: This report provides updated assessment forms, placards, and procedures that are based on an in-depth review and evaluation of the widespread application of the ATC-20 procedures following five earthquakes occurring since the initial release of the ATC-20 report in 1989.

ATC-20-3: The report, *Case Studies in Rapid Postearthquake Safety Evaluation of Buildings,* was funded by ATC and R. P. Gallagher Associates. Available through the ATC office. (Published 1996, 295 pages)

ABSTRACT: This report contains 53 case studies using the ATC-20 Rapid Evaluation procedure. Each case study is illustrated with photos and describes how a building was inspected and evaluated for life safety, and includes a completed safety assessment form and placard. The report is intended to be used as a training and reference manual for building officials, building inspectors, civil and structural engineers, architects, disaster workers, and others who may be asked to perform safety evaluations after an earthquake.

ATC-20-T: The report, *Postearthquake Safety Evaluation of Buildings Training Manual* was developed under a contract with FEMA.

Available through the ATC office. (Published 1993, 177 pages; 160 slides)

ABSTRACT: This training manual is intended to facilitate the presentation of the contents of the ATC-20 and ATC-20-1. The training materials consist of 160 slides of photographs, schematic drawings and textual information and a companion training presentation narrative coordinated with the slides. Topics covered include: posting system; evaluation procedures; structural basics; wood frame, masonry, concrete, and steel frame structures; nonstructural elements; geotechnical hazards; hazardous materials; and field safety.

ATC-21: The report, *Rapid Visual Screening of Buildings for Potential Seismic Hazards: A Handbook*, was developed under a contract from FEMA. Available through the ATC office. (Published 1988, 185 pages)

ABSTRACT: This report describes a rapid visual screening procedure for identifying those buildings that might pose serious risk of loss of life and injury, or of severe curtailment of community services, in case of a damaging earthquake. The screening procedure utilizes a methodology based on a "sidewalk survey" approach that involves identification of the primary structural load resisting system and building materials, and assignment of a basic structural hazards score and performance modification factors based on observed building characteristics. Application of the methodology identifies those buildings that are potentially hazardous and should be analyzed in more detail by a professional engineer experienced in seismic design.

ATC-21-1: The report, *Rapid Visual Screening of Buildings for Potential Seismic Hazards: Supporting Documentation*, was developed under a contract from FEMA. Available through the ATC office. (Published 1988, 137 pages)

ABSTRACT: Included in this report are (1) a review and evaluation of existing procedures; (2) a listing of attributes considered ideal for a rapid visual screening procedure; and (3) a technical discussion of the recommended rapid visual screening procedure that is documented in the ATC-21 report.

ATC-21-2: The report, *Earthquake Damaged Buildings: An Overview of Heavy Debris and Victim Extrication*, was developed under a contract from FEMA. (Published 1988, 95 pages)

ABSTRACT: Included in this report, a companion volume to the ATC-21 and ATC-21-1 reports, is state-of-the-art information on (1) the identification of those buildings that might collapse and trap victims in debris or generate debris of such a size that its handling would require special or heavy lifting equipment; (2) guidance in identifying these types of buildings, on the basis of their major exterior features, and (3) the types and life capacities of equipment required to remove the heavy portion of the debris that might result from the collapse of such buildings.

ATC-21-T: The report, *Rapid Visual Screening of Buildings for Potential Seismic Hazards Training Manual* was developed under a contract with FEMA. Available through the ATC office. (Published 1996, 135 pages; 120 slides)

ABSTRACT: This training manual is intended to facilitate the presentation of the contents of the ATC-21 report. The training materials consist of 120 slides and a companion training presentation narrative coordinated with the slides. Topics covered include: description of procedure, building behavior, building types, building scores, occupancy and falling hazards, and implementation.

ATC-22: The report, *A Handbook for Seismic Evaluation of Existing Buildings (Preliminary)*, was developed under a contract from FEMA. Available through the ATC office. (Originally published in 1989; revised by BSSC and published as the *NEHRP Handbook for Seismic Evaluation of Existing Buildings* in 1992, 211 pages)

ABSTRACT: This handbook provides a methodology for seismic evaluation of existing buildings of different types and occupancies in areas of different seismicity throughout the United States. The methodology, which has been field tested in several programs nationwide, utilizes the information and procedures developed for and documented in the ATC-14 report. The handbook includes checklists, diagrams, and sketches designed to assist the user.

ATC-22-1: The report, *Seismic Evaluation of Existing Buildings: Supporting Documentation*, was developed under a contract from FEMA. (Published 1989, 160 pages)

ABSTRACT: Included in this report, a companion volume to the ATC-22 report, are (1) a review and evaluation of existing buildings seismic evaluation methodologies; (2) results from field tests of the ATC-14 methodology; and (3) summaries of evaluations of ATC-14 conducted by the National Center for Earthquake Engineering Research (State University of New York at Buffalo) and the City of San Francisco.

ATC-23A: The report, *General Acute Care Hospital Earthquake Survivability Inventory for California, Part A: Survey Description, Summary of Results, Data Analysis and Interpretation*, was developed under a contract from the Office of Statewide Health Planning and Development (OSHPD), State of California. Available through the ATC office. (Published 1991, 58 pages)

ABSTRACT: This report summarizes results from a seismic survey of 490 California acute care hospitals. Included are a description of the survey procedures and data collected, a summary of the data, and an illustrative discussion of data analysis and interpretation that has been provided to demonstrate potential applications of the ATC-23 database.

ATC-23B: The report, *General Acute Care Hospital Earthquake Survivability Inventory for California, Part B: Raw Data*, is a companion document to the ATC-23A Report and was developed under the above-mentioned contract from OSHPD. Available through the ATC office. (Published 1991, 377 pages)

ABSTRACT: Included in this report are tabulations of raw general site and building data for 490 acute care hospitals in California.

ATC-24: The report, *Guidelines for Seismic Testing of Components of Steel Structures*, was jointly funded by the American Iron and Steel Institute (AISI), American Institute of Steel Construction (AISC), National Center for Earthquake Engineering Research (NCEER), and NSF. Available through the ATC office. (Published 1992, 57 pages)

ABSTRACT: This report provides guidance for most cyclic experiments on components of steel structures for the purpose of consistency in experimental procedures. The report contains recommendations and companion commentary pertaining to loading histories, presentation of test results, and other aspects of experimentation. The recommendations are written specifically for experiments with slow cyclic load application.

ATC-25: The report, *Seismic Vulnerability and Impact of Disruption of Lifelines in the Conterminous United State*s, was developed under a contract from FEMA. Available through the ATC office. (Published 1991, 440 pages)

ABSTRACT: Documented in this report is a national overview of lifeline seismic vulnerability and impact of disruption. Lifelines considered include electric systems, water systems, transportation systems, gas and liquid fuel supply systems, and emergency service facilities (hospitals, fire and police stations). Vulnerability estimates and impacts developed are presented in terms of estimated first approximation direct damage losses and indirect economic losses.

ATC-25-1: The report, *A Model Methodology for Assessment of Seismic Vulnerability and Impact of Disruption of Water Supply Systems*, was developed under a contract from FEMA. Available through the ATC office. (Published 1992, 147 pages)

ABSTRACT: This report contains a practical methodology for the detailed assessment of seismic vulnerability and impact of disruption of water supply systems. The methodology has been designed for use by water system operators. Application of the methodology enables the user to develop estimates of direct damage to system components and the time required to restore damaged facilities to pre-earthquake usability. Suggested measures for mitigation of seismic hazards are also provided.

ATC-28: The report, *Development of Recommended Guidelines for Seismic Strengthening of Existing Buildings, Phase I: Issues Identification and Resolution*, was developed under a contract with FEMA. Available through the ATC office. (Published 1992, 150 pages)

ABSTRACT: This report identifies and provides resolutions for issues that will affect the development of guidelines for the seismic strengthening of existing buildings. Issues addressed include: implementation and format, coordination with other efforts, legal and political, social, economic, historic

buildings, research and technology, seismicity and mapping, engineering philosophy and goals, issues related to the development of specific provisions, and nonstructural element issues.

ATC-29: The report, *Proceedings of a Seminar and Workshop on Seismic Design and Performance of Equipment and Nonstructural Elements in Buildings and Industrial Structures*, was developed under a grant from NCEER and NSF. Available through the ATC office. (Published 1992, 470 pages)

ABSTRACT: These Proceedings contain 35 papers describing state-of-the-art technical information pertaining to the seismic design and performance of equipment and nonstructural elements in buildings and industrial structures. The papers were presented at a seminar in Irvine, California in 1990. Included are papers describing current practice, codes and regulations; earthquake performance; analytical and experimental investigations; development of new seismic qualification methods; and research, practice, and code development needs for specific elements and systems. The report also includes a summary of a proposed 5-year research agenda for NCEER.

ATC-29-1: The report, *Proceedings of a Seminar on Seismic Design, Retrofit, and Performance of Nonstructural Components*, was developed under a grant from NCEER and NSF. Available through the ATC office. (Published 1998, 518 pages)

ABSTRACT: These Proceedings contain 38 technical papers presented at a seminar in San Francisco, California in 1998. The paper topics include: observed performance in recent earthquakes; seismic design codes, standards, and procedures for commercial and institutional buildings; seismic design issues relating to industrial and hazardous material facilities; design analysis, and testing; and seismic evaluation and rehabilitation of conventional and essential facilities, including hospitals.

ATC-30: The report, *Proceedings of Workshop for Utilization of Research on Engineering and Socioeconomic Aspects of 1985 Chile and Mexico Earthquakes*, was developed under a grant from the NSF. Available through the ATC office. (Published 1991, 113 pages)

ABSTRACT: This report documents the findings of a 1990 technology transfer workshop in San Diego, California, co-sponsored by ATC and the Earthquake Engineering Research Institute. Included in the report are invited papers and working group recommendations on geotechnical issues, structural response issues, architectural and urban design considerations, emergency response planning, search and rescue, and reconstruction policy issues.

ATC-31: The report, *Evaluation of the Performance of Seismically Retrofitted Buildings*, was developed under a contract from the National Institute of Standards and Technology (NIST, formerly NBS) and funded by the USGS. Available through the ATC office. (Published 1992, 75 pages)

ABSTRACT: This report summarizes the results from an investigation of the effectiveness of 229 seismically retrofitted buildings, primarily unreinforced masonry and concrete tilt-up buildings. All buildings were located in the areas affected by the 1987 Whittier Narrows, California, and 1989 Loma Prieta, California, earthquakes.

ATC-32: The report, *Improved Seismic Design Criteria for California Bridges: Provisional Recommendations,* was funded by the California Department of Transportation (Caltrans). Available through the ATC office. (Published 1996, 215 Pages)

ABSTRACT: This report provides recommended revisions to the current *Caltrans Bridge Design Specifications* (BDS) pertaining to seismic loading, structural response analysis, and component design. Special attention is given to design issues related to reinforced concrete components, steel components, foundations, and conventional bearings. The recommendations are based on recent research in the field of bridge seismic design and the performance of Caltrans-designed bridges in the 1989 Loma Prieta and other recent California earthquakes.

ATC-33: The reports, *NEHRP Guidelines for the Seismic Rehabilitation of Buildings* (FEMA 273 report) and companion *NEHRP*

Commentary on the Guidelines for the Seismic Rehabilitation of Buildings (FEMA 274 report)**,** were developed under a contract with the Building Seismic Safety Council for FEMA. Available through FEMA by contacting 1-800-480-2520 (Published, 1997, *Guidelines*, 440 pages; *Commentary*, 492 pages)

ABSTRACT. Developed over a 5-year period through the efforts of more than 60 paid consultants and several hundred volunteer reviewers, these documents provide nationally applicable, state-of-the-art guidance for the seismic rehabilitation of buildings. The documents contain several new features that depart significantly from previous seismic design procedures used to design new buildings: seismic performance levels and rehabilitation objectives; simplified and systematic rehabilitation methods; varying methods of analysis, including new linear static and nonlinear static analysis procedures; quantitative specifications of component behavior, and procedures for incorporating new information and technologies, such as seismic isolation and energy dissipation systems, into rehabilitation.

ATC-34: The report, *A Critical Review of Current Approaches to Earthquake Resistant Design***,** was developed under a grant from NCEER and NSF. Available through the ATC office. (Published, 1995, 94 pages)

ABSTRACT. This report documents the history of U. S. codes and standards of practice, focusing primarily on the strengths and deficiencies of current code approaches. Issues addressed include: seismic hazard analysis, earthquake collateral hazards, performance objectives, redundancy and configuration, response modification factors (*R* factors), simplified analysis procedures, modeling of structural components, foundation design, nonstructural component design, and risk and reliability. The report also identifies goals that a new seismic code should achieve.

ATC-35: This report, *Enhancing the Transfer of U.S. Geological Survey Research Results into Engineering Practice* was developed under a contract with the USGS. Available through the ATC office. (Published 1996, 120 pages)

ABSTRACT: The report provides a program of recommended "technology transfer" activities for the USGS; included are recommendations pertaining to management actions, communications with practicing engineers, and research activities to enhance development and transfer of information that is vital to engineering practice.

ATC-35-1: The report, *Proceedings of Seminar on New Developments in Earthquake Ground Motion Estimation and Implications for Engineering Design Practice*, was developed under a cooperative agreement with USGS. Available through the ATC office. (Published 1994, 478 pages)

ABSTRACT: These Proceedings contain 22 technical papers describing state-of-the-art information on regional earthquake risk (focused on five specific regions--California, Pacific Northwest, Central United States, and northeastern North America); new techniques for estimating strong ground motions as a function of earthquake source, travel path, and site parameters; and new developments specifically applicable to geotechnical engineering and the seismic design of buildings and bridges.

ATC-35-2: The report, *Proceedings: National Earthquake Ground Motion Mapping Workshop*, was developed under a cooperative agreement with USGS. Available through the ATC office. (Published 1997, 154 pages)

ABSTRACT: These Proceedings document the technical presentations and findings of a workshop in Los Angeles in 1995 on several key issues that affect the preparation and use of national earthquake ground motion maps for design. The following four key issues were the focus of the workshop: ground motion parameters; reference site conditions; probabilistic versus deterministic basis, and

the treatment of uncertainty in seismic source characterization and ground motion attenuation.

ATC-37: The report, *Review of Seismic Research Results on Existing Buildings***,** was developed in conjunction with the Structural Engineers Association of California and California Universities for Research in Earthquake Engineering under a contract from the California Seismic Safety Commission (SSC). Available through the Seismic Safety Commission as Report SSC 94-03. (Published, 1994, 492 pages)

ABSTRACT. This report describes the state of knowledge of the earthquake performance of nonductile concrete frame, shear wall, and infilled buildings. Included are summaries of 90 recent research efforts with key results and conclusions in a simple, easy-to-access format written for practicing design professionals.

ATC-40: The report, *Seismic Evaluation and Retrofit of Concrete Buildings***,** was developed under a contract from the California Seismic Safety Commission. Available through the ATC office. (Published, 1996, 612 pages)

ABSTRACT. This 2-volume report provides a state-of-the-art methodology for the seismic evaluation and retrofit of concrete buildings. Specific guidance is provided on the following topics: performance objectives; seismic hazard; determination of deficiencies; retrofit strategies; quality assurance procedures; nonlinear static analysis procedures; modeling rules; foundation effects; response limits; and nonstructural components. In 1997 this report received the Western States Seismic Policy Council "Overall Excellence and New Technology Award."

ATC-44: The report, *Hurricane Fran, North Carolina, September 5, 1996: Reconnaissance Report***,** was funded by the Applied Technology Council. Available through the ATC office. (Published, 1997, 36 pages)

ABSTRACT. Written for an intended audience of design professionals and regulators, this report contains information on hurricane size, path, and rainfall amounts; coastal impacts, including storm surges and waves, forces on structures, and the role of erosion; the role of beach nourishment in reducing wave energy and crest height; building code requirements; observations and interpretations of damage to buildings, including the effect of debris acting as missiles; and lifeline performance.

ATC-R-1: The report, *Cyclic Testing of Narrow Plywood Shear Walls,* was developed with funding from the Henry J. Degenkolb Memorial Endowment Fund of the Applied Technology Council. Available through the ATC office (Published 1995, 64 pages)

ABSTRACT: This report documents ATC's first self-directed research program: a series of static and dynamic tests of narrow plywood wall panels having the standard 3.5-to-1 height-to-width ratio and anchored to the sill plate using typical bolted, 9-inch, 5000-lb. capacity hold-down devices. The report provides a description of the testing program and a summary of results, including comparisons of drift ratios found during testing with those specified in the seismic provisions of the 1991 *Uniform Building Code*.

1999-2000 BOARD OF DIRECTORS
President: Mr. Edwin T. Dean
Vice President: Dr. Arthur N. L. Chiu
Past President: Dr. Charles C. Thornton
Secretary/Treasurer: Mr. Andrew T. Merovich

Mr. James R. Cagley
Cagley & Associates
Rockville, Maryland

Dr. Arthur N. L. Chiu
University of Hawaii at Manoa
Honolulu, Hawaii

Mr. Edwin T. Dean
KPFF Consulting Engineers
Portland, Oregon

Mr. James M. Delahay
Lane Bishop York Delahay, Inc.
Birmingham, Alabama

Dr. Robert G. Dean
University of Florida
Gainesville, Florida

Mr. Edwin H. Johnson
Johnson, Atkinson, and Spurrier
San Diego, California 92107

Mr. Newland J. Malmquist
Larsen & Malmquist
Salt Lake City, Utah

Mr. Andrew T. Merovich
A. T. Merovich & Associates
San Rafael, California

Mr. Stephen H. Pelham
Barrish, Pelham & Partners, Inc.
Sacramento, California

Mr. Richard J. Phillips
Hillman Biddison & Loevenguth
Los Angeles, California

Ms. Maryann Phipps
Degenkolb Engineers
San Francisco, California

Dr. Charles W. Roeder
University of Washington
Seattle, Washington

Mr. C. Mark Saunders
Rutherford & Chekene
San Francisco, California

Mr. Jonathan G. Shipp
EQE International
Irvine, California

Dr. Charles C. Thornton
Thornton-Tomasetti
New York, New York

ATC BOARD OF DIRECTORS (1973-Present)

Milton A. Abel	(1979-1985)
James C. Anderson	(1978-1981)
Thomas G. Atkinson*	(1988-1994)
Albert J. Blaylock	(1976-1977)
Robert K. Burkett	(1984-1988)
James R. Cagley	(1998-2001)
H. Patrick Campbell	(1989-1990)
Arthur N. L. Chiu	(1996-2002)
Anil Chopra	(1973-1974)
Richard Christopherson*	(1976-1980)
Lee H. Cliff	(1973)
John M. Coil*	(1986-1987, 1991-1997)
Eugene E. Cole	(1985-1986)
Edwin T. Dean*	(1996-2002)
Robert G. Dean	(1996-2001)
James M. Delahay	(1999-2002)
Edward F. Diekmann	(1978-1981)
Burke A. Draheim	(1973-1974)
John E. Droeger	(1973)
Nicholas F. Forell*	(1989-1996)
Douglas A. Foutch	(1993-1997)
Paul Fratessa	(1991-1992)
Sigmund A. Freeman	(1986-1989)
Barry J. Goodno	(1986-1989)
Mark R. Gorman	(1984-1987)
Gerald H. Haines	(1981-1982, 1984-1985)
William J. Hall	(1985-1986)
Gary C. Hart	(1975-1978)
Lyman Henry	(1973)
James A. Hill	(1992-1995)
Ernest C. Hillman, Jr.	(1973-1974)
Ephraim G. Hirsch	(1983-1984)
William T. Holmes*	(1983-1987)
Warner Howe	(1977-1980)
Edwin T. Huston*	(1990-1997)
Paul C. Jennings	(1973-1975)
Carl B. Johnson	(1974-1976)
Edwin H. Johnson	(1988-1989, 1998-2001)
Stephen E. Johnston*	(1973-1975, 1979-1980)
Joseph Kallaby*	(1973-1975)
Donald R. Kay	(1989-1992)
T. Robert Kealey*	(1984-1988)
H. S. (Pete) Kellam	(1975-1976)
Helmut Krawinkler	(1979-1982)
James S. Lai	(1982-1985)
Gerald D. Lehmer	(1973-1974)
James R. Libby	(1992-1998)
Charles Lindbergh	(1989-1992)
R. Bruce Lindermann	(1983-1986)
L. W. Lu	(1987-1990)
Walter B. Lum	(1975-1978)
Kenneth A. Luttrell	(1991-1999)
Newland J. Malmquist	(1997-2001)
Melvyn H. Mark	(1979-1982)
John A. Martin	(1978-1982)
John F. Meehan*	(1973-1978)
Andrew T. Merovich	(1996-2002)
David L. Messinger	(1980-1983)
Stephen McReavy	(1973)
Bijan Mohraz	(1991-1997)
William W. Moore*	(1973-1976)
Gary Morrison	(1973)
Robert Morrison	(1981-1984)
Ronald F. Nelson	(1994-1995)
Joseph P. Nicoletti*	(1975-1979)
Bruce C. Olsen*	(1978-1982)
Gerard Pardoen	(1987-1991)
Stephen H. Pelham	(1998-2001)
Norman D. Perkins	(1973-1976)
Richard J. Phillips	(1997-2000)
Maryann T. Phipps	(1995-1996; 1999-2002)
Sherrill Pitkin	(1984-1987)
Edward V. Podlack	(1973)
Chris D. Poland	(1984-1987)
Egor P. Popov	(1976-1979)
Robert F. Preece*	(1987-1993)
Lawrence D. Reaveley*	(1985-1991)
Philip J. Richter*	(1986-1989)
John M. Roberts	(1973)
Charles Roeder	(1997-2000)
Arthur E. Ross*	(1985-1991, 1993-1994)
C. Mark Saunders*	(1993-2000)
Walter D. Saunders*	(1975-1979)
Lawrence G. Selna	(1981-1984)
Wilbur C. Schoeller	(1990-1991)
Samuel Schultz*	(1980-1984)
Daniel Shapiro*	(1977-1981)
Jonathan G. Shipp	(1996-2000)
Howard Simpson*	(1980-1984)
Mete Sozen	(1990-1993)
Donald R. Strand	(1982-1983)
James L. Stratta	(1975-1979)
Scott Stedman	(1996-1997)
Edward J. Teal	(1976-1979)
W. Martin Tellegen	(1973)
John C. Theiss*	(1991-1998)
Charles H. Thornton*	(1992-2000)
James L. Tipton	(1973)
Ivan Viest	(1975-1977)
Ajit S. Virdee*	(1977-1980, 1981-1985)
J. John Walsh	(1987-1990)
Robert S. White	(1990-1991)
James A. Willis*	(1980-1981, 1982-1986)
Thomas D. Wosser	(1974-1977)
Loring A. Wyllie	(1987-1988)
Edwin G. Zacher	(1981-1984)
Theodore C. Zsutty	(1982-1985)

* President

ATC EXECUTIVE DIRECTORS (1973-Present)

Ronald Mayes	(1979-1981)
Christopher Rojahn	(1981-present)
Roland L. Sharpe	(1973-1979)

Applied Technology Council
Sponsors, Supporters, and Contributors

Sponsors

Structural Engineers Association of California
James R. & Sharon K. Cagley
John M. Coil
Burkett & Wong

Supporters

Charles H. Thornton
Degenkolb Engineers
Japan Structural Consultants Association

Contributors

Lawrence D. Reaveley
Omar Dario Cardona Arboleda
Edwin T. Huston
John C. Theiss
Reaveley Engineers
Rutherford & Chekene
E. W. Blanch Co.